CLAS®

Solutions

WORKSHOP EQUIPMENT

5
WORKSHOP EQUIPMENT

Discover the WORKSHOP EQUIPMENT solutions, taken from our 2022-2023 general catalog.

5 - LIFTS

23 - WHEEL SERVICE EQUIPMENT

41 - AIR COMPRESSORS

47 - AIR PIPE FITTINGS

52 - WORKSHOP FURNITURE

58 - EXHAUST GAS EXTRACTION

65 - STORAGE SPILL CONTAINMENT

68 - WORKSHOP HEATER

Find all our ranges on **clas.com**
(or in our general catalog)

CHOOSE YOUR LIFT PROPERLY.

Key points to consider

• type of vehicle to be lifted?
• required lifting capacity?
• type of service: bodywork, painting, geometry, mechanics?

There is also the question of the space and height available in the workshop and the quality of the floor.

A flat and thick slab is required for the installation of some post lifts (fixing in the concrete).
A study must be carried out beforehand to know if the installation is possible... or not.

THE DIFFERENT TYPES OF LIFTS

SINGLE POST LIFT OR 1 POST LIFT

(+) Low space requirement
Mobile
Perfect for operations on the sides of the vehicle
No heavy construction needed

(-) Does not allow for all underbody reparations, neither geometry
To be considered as an additional lift

2 POST LIFTS

(+) High load capacity
Low space requirement
Lightweight

(-) Stability
Setting up the vehicle

4 POST LIFTS

(+) Perfect for LCV's
Can be used for storage (vehicle below + above)

(-) Space requirement

SCISSOR LIFTS

(+) Easy to set up
Lifting speed
Intervention possible on 4 sides of the vehicle

(-) Offset control panel

OUR POST LIFT RANGE

REF	TYPE	CAPACITY	BODY REPAIR	ROCKER PANEL	PAINTING	TIRES	GEOMETRY
PE 1000	1 column	3T	•		•	•	
PE 2000M/T - PE 2001M/T	2 columns	4T		•		•	
PE 2004M/T - PE 2005M/T	2 columns	4T		•		•	
PE 2008T - PE 2003T - PE 2009T	2 columns	4T		•		•	
PE 2002T - PE 2006T - PE 2007T	2 columns	5T		•		•	
PE 2010T - PE 2011T - PE 2012T	2 columns	6T		•		•	
PE 4000T	4 columns	5.5T	•		•		
PE 4001T	4 columns	5.5T	•		•		•
PE 4002T	4 columns	5T	•		•	•	•
PE 6000M/T - PE 6002M/T	scissor	3T	•		•	•	
PE 6001M/T - PE 6005M/T	double scissor	3T	•		•	•	
PE 6004M/T	double scissor	3.5T	•		•	•	
PE 6006M/T	simple scissor	5T	•		•	•	•
PE 6007	simple scissor	5.5T	•		•	•	•
PE 8000M/T - PE 8001M/T	lifting table	3T	•		•	•	

Post lift references in bold can be mounted on screeds of less than 20 cm.

THINK ABOUT IT!

SA 3028	HV32 HYDRAULIC OIL 5L
SA 3012	HV46 HYDRAULIC OIL 5L
SA 3011	HV46 HYDRAULIC OIL 25L
SA 3027	HV32 HYDRAULIC OIL 25L

SINGLE POST LIFTS

TE

PE 1000

1 COLUMN MOBILE POST LIFT 3T

Optimized work thanks to fast lifting and lowering times (+/- 45 seconds).
Simple operation: lifting and lowering via control box.
Maximum safety: electromagnetic unlocking of the safety catches, without mechanical lever, emergency lowering system in case of power failure.
Particularly suitable for painting and bodywork activities, brake and tyre service.

Electro-hydraulic **post lift.**
Flexibility of use: easily manoeuvrable thanks to its travel kit, without floor fixation.
Working comfort: equipped with an access ramp with a 100mm high lowered ground clearance for simplified vehicle pick-up.
Small footprint: compact, ideal for small spaces.
High variability: multiple lifting capacities thanks to the 4 telescopic arms in 2 parts and adjustable threaded pads (100 - 170mm).

Specifications:
- lifting height: 100-1810mm
- ascent/descent time: +/- 45s
- drive voltage: 2.2Kw/230V/50Hz
- foundations: thickness without flooring: 200mm
- delivered pre-assembled, saving time during assembly
- weight: 770kg

MADE IN EUROPE

Max. T 3 | 230V | 2200 W | 2 WARRANTY

2 POST LIFTS

TE

PE 2001T

2 COLUMNS ASYMETRIC POST LIFT 400V 4T

PE 2001M

2 COLUMNS ASYMETRIC POST LIFT 230V 4T

Electro-hydraulic post lift.
Hydraulic unit: fast ascent and descent (+/- 40 seconds).
Multiple lifting capacities thanks to the telescopic arms in asymmetrical version (short front 3 stages from 560mm to 995mm - long rear 2 stages from 660 to 1210mm).

NOTE

Pads and wedges
p. 147

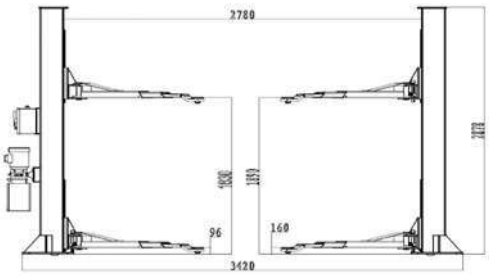

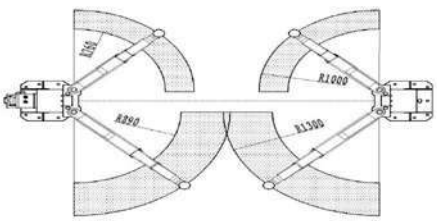

Specifications:
- lifting height : 105-1890mm
- lifting time : +/- 40s
- lowering time : +/- 40s
- driving power: 2.2kW
- drive voltage: (3 ~) 400/50 V/Hz
- concrete strength/quality: 200mm-C20/25
- adjustable buffers on screw 55mm stroke.
- electromagnetic release of the safety catches
- overload and pipe breakage safety
- system synchronization: by cable.
- protection strip for cylinder, chain and cables included on each column
- made in Europe
- epoxy paint

Options :
- PE0007: Mercedes/Iveco 105-135mm extension sets

Max. T 4 | 2200 W | 2 WARRANTY

TE

PE 2000T

2 COLUMNS ASYMETRIC POST LIFT WITH BASEMENT 400V 4T

PE 2000M

2 COLUMNS ASYMETRIC POST LIFT WITH BASEMENT 230V 4T

Specially designed for screeds that do not meet the minimum thickness requirements of 200mm, or have a slight flatness problem.

Electro-hydraulic post lift.
Push cylinder on cart, without chain.
Multiple lifting capacities thanks to the telescopic arms in asymmetrical version (short front 3 stages from 560mm to 995mm - long rear 2 stages from 660 to 1210mm).
Cylinder and cable protection strip included on each column.

Low thickness slab

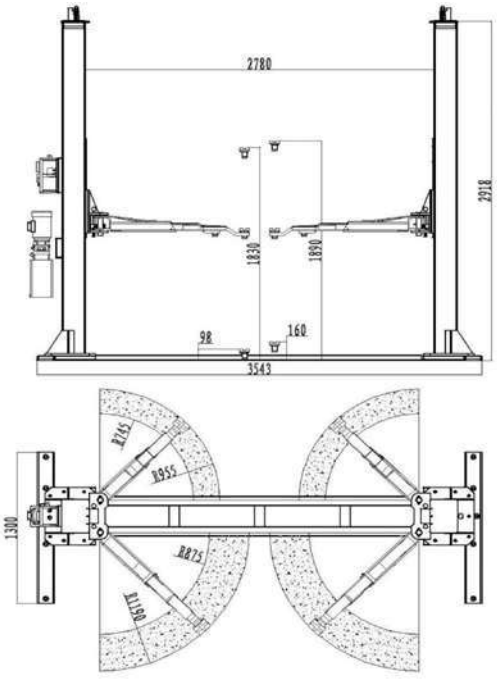

MADE IN EUROPE

Specifications:
- lifting height: 126-1890mm
- lifting time: +/- 40s
- lowering time: +/- 40s
- drive power: 2.2 kW
- electrical voltage of the drive: (3 ~) 400/50 V/Hz
- adjustable pads on 55mm stroke screw
- electromagnetic unlocking of the safety notches
- overload safety and hose rupture
- bevelled columns for large door openings
- synchronization system by cable
- made in Europe
- Epoxy painting

Options :
- PE0007: Mercedes/Iveco 105-135mm extension sets

Max. T 4 | 2200 W | 2 WARRANTY

2 HEIGHTS POSSIBLE

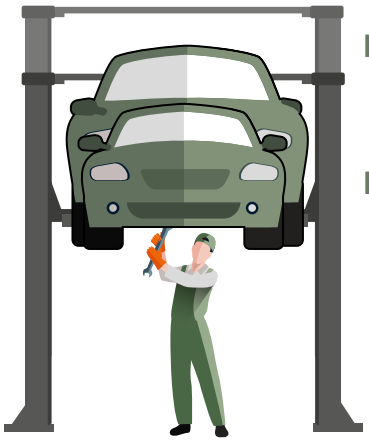

H 4.78m

H 3.87m

Electro-hydraulic post lift.
Hoses and cables pass through the top for optimum working comfort, allowing free access under the vehicle for equipment (cylinders, oil recovery system, etc.), making it easier to clean the workshop.
Multiple lifting capacities thanks to the telescopic arms in asymmetrical version (front 3 stages from 560 to 995mm, rear long 2 stages from 660 to 1210mm) allowing precise lifting of low or utility vehicles.

PE 2005T

2 COLUMNS POST LIFT 400V 4T HIGH PASSAGE 4780mm 2.2Kw

PE 2005M

2 COLUMNS POST LIFT 230V 4T HIGH PASSAGE 4780mm 2.2Kw

PE 2004T

2 COLUMNS POST LIFT 400V 4T HIGH PASSAGE 3876mm 2.2Kw

PE 2004M

2 COLUMNS POST LIFT 230V 4T HIGH PASSAGE 3876mm 2.2Kw

Specifications:
- lifting height : 105-1890mm
- lifting time : +/- 40s
- lowering time : +/- 40s
- driving power: 2.2kW
- drive voltage: (3 -) 400/50 V/Hz
- concrete strength/quality: 200mm-C20/25
- adjustable buffers on screw 55mm stroke (+ 70mm extension)
- electromagnetic unlocking of safety catches
- overload and pipe rupture safety
- system synchronization: by cable.
- protection strip for cylinder, chain and cables included on each column
- made in Europe
- epoxy paint

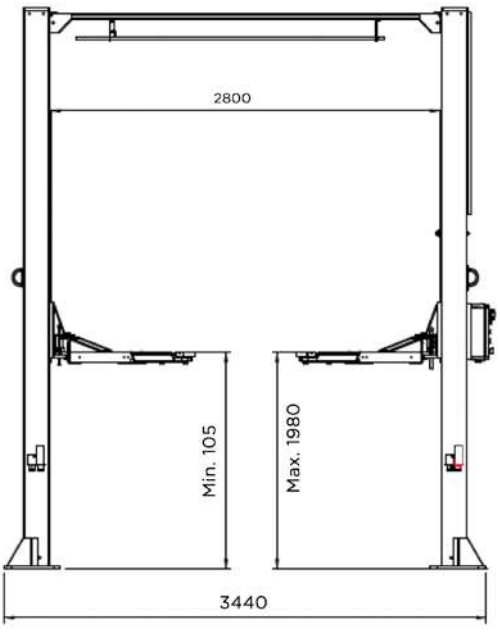

Max. T 4 | 2200 W | 2 WARRANTY

TE

3 HEIGHTS POSSIBLE

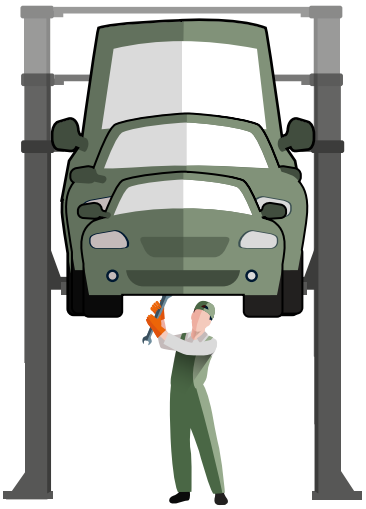

H 5.07m

H 4.47m

H 3.87m

PE 2009T

2 COLUMNS POST LIFT 400V 4T HIGH
PASSAGE 5070mm 2.6kw

PE 2003T

2 COLUMNS POST LIFT 400V 4T HIGH
PASSAGE 4470mm 2.6kw

PE 2008T

2 COLUMNS POST LIFT 400V 4T HIGH
PASSAGE 3870mm 2.6kw

Height adjustable to the millimeter

Electro-hydraulic post lift.
Hoses and cables pass through the top for optimum working comfort, allowing free access under the vehicle for equipment (cylinders, oil recovery system, etc.), making it easier to clean the workshop.
Multiple lifting capacities thanks to the telescopic arms in asymmetrical version (front short 3 stages from 640 to 1200mm, rear long 2 stages from 775 to 1550mm) allowing a precise lifting of low or utility vehicles.

Specifications:
- lifting height: 65-1980mm
- lifting time: +/- 40s
- lowering time: +/- 40s
- drive power: 2.6 kw
- electrical voltage of the drive: (3-) 400/50 V/Hz
- strength/quality of concrete: 200mm-C20/25
- adjustable pads on 55mm stroke screw (+ 70mm and 160mm extension)
- electromagnetic unlocking of the safety notches
- overload safety and hose rupture
- bevelled columns for large door openings
- hydraulic synchronization system
- made in Europe
- Epoxy painting

Options :
- PE0007: Mercedes/Iveco 105-135mm extension sets

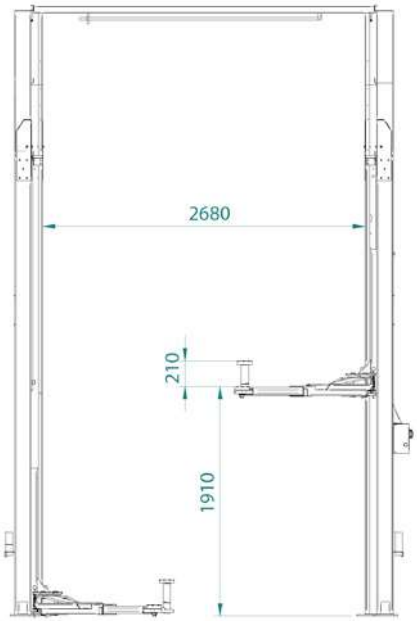

Max. T 4 | 400V | 2600 W | 2 WARRANTY

3 HEIGHTS POSSIBLE

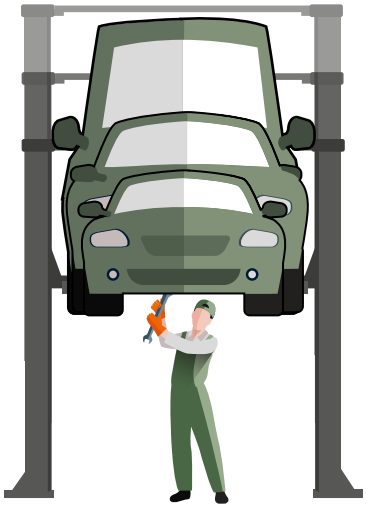

H 5.07m

H 4.47m

H 3.87m

PE 2007T

2 COLUMNS SYMETRIC POST LIFT 400V 5T HIGH PASSAGE 5070mm 2.6Kw

PE 2006T

2 COLUMNS SYMETRIC POST LIFT 400V 5T HIGH PASSAGE 4470mm 2.6Kw

PE 2002T

2 COLUMNS SYMETRIC POST LIFT 400V 5T HIGH PASSAGE 3870mm 2.6Kw

Height adjustable to the millimeter

Especially adapted to repair activities on commercial vehicles and 4x4.

Electro-hydraulic post lift.
Hoses and cables pass through the top for optimum working comfort, allowing free access under the vehicle for equipment (cylinders, oil recovery system, etc.), making it easier to clean the workshop.
Hydraulic unit with fast up and down (+/- 50s). Adjustment possibility, equipped with a position securing device for precise intervention, gearbox assembly, nut alignment...
Multiple lifting capacities thanks to the telescopic arms in symmetrical 3-stage version from 860 to 1700mm for precise vehicle lifting.
Adjustable pads on 55mm stroke screw equipped with 70mm and 160mm extension.
Electromagnetic unlocking of the safety catches, overload safety and hose rupture.
Hydraulic synchronization system.
Made in Europe, powder coated.

Specifications:
- lifting height : 95-2050mm
- lifting time : +/- 50s
- lowering time : +/- 50s
- driving power: 2.6kW
- drive voltage: (3 -) 400/50 V/Hz
- concrete strength/quality: 200mm-C20/25
- adjustable buffers on screw stroke 55mm (+ raised 70 and 160mm)
- electro-magnetic unlocking of the safety notches
- bevelled columns for large door openings
- overload and hose rupture safety
- semi-automatic hydraulic system synchronization
- made in Europe
- epoxy paint

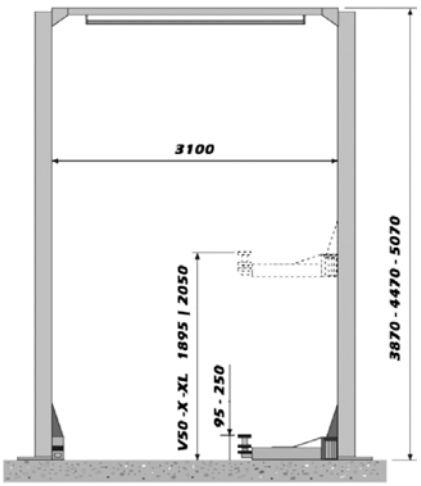

Max. T 5 | 400V | 2600 W | 2 WARRANTY

TE

3 HEIGHTS POSSIBLE

H 5.08m

H 4.48m

H 3.87m

PE 2012T

2 COLUMNS POST LIFT 400V 6T HIGH
PASSAGE 5080mm 2.6Kw

PE 2011T

2 COLUMNS POST LIFT 400V 6T HIGH
PASSAGE 4480mm 2.6Kw

PE 2010T

2 COLUMNS POST LIFT 400V 6T HIGH
PASSAGE 3870mm 2.6Kw

Large scope of application

Electro-hydraulic post lift.
Hoses and cables pass through the top for optimal working comfort, allowing free access under the vehicle for equipment (jacks, oil recuperator...), making it easier to clean the workshop.
Hydraulic unit: quick up and down with adjustment possibility, equipped with a position securing device for precise intervention, gearbox assembly, nut alignment...
Multiple lifting capacities thanks to the articulated arms in symmetrical version (3 stages from 790 to 1890mm) allowing lifting adjustable to the millimeter of vehicles.

Specifications:
- lifting height : 100-1920mm
- lifting time : +/- 80s
- lowering time : +/- 100s
- driving power: 2.6kW
- drive voltage: (3 -) 400/50 V/Hz
- concrete strength/quality: 200mm-C20/25
- adjustable buffers on screw 55mm stroke (+ raised 70 and 160mm)
- electro-magnetic unlocking of the safety notches
- bevelled columns for large door openings
- overload and hose rupture safety
- semi-automatic hydraulic system synchronization
- made in Europe
- epoxy paint

Options :
- PE0007: Mercedes/Iveco 105-135mm extension sets

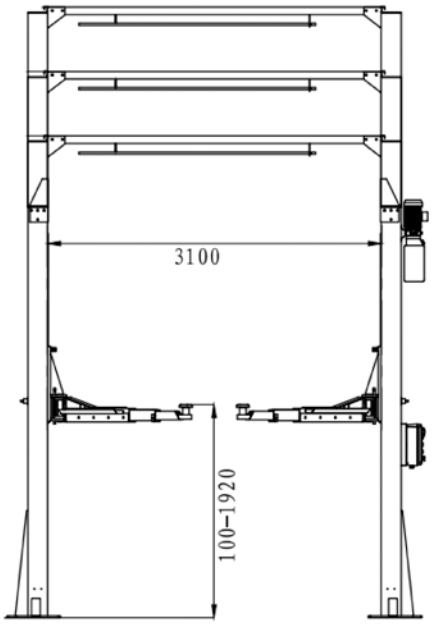

Multi-jointed arm

Max. T 6 | 400V | 2600 W | 2 WARRANTY

4 POST LIFTS

TE

PE 4000T

4 COLUMNS POST LIFT FLAT TRACK 400V 5.5T

Electro-hydraulic post lift.
Working comfort: one-piece access ramps, quick and easy vehicle positioning with low ground clearance, allows for quick repair or inspection, 5.19m long paths
Equipped with guides for optional lifting crossbeam.

NOTE
Pads and wedges
p. 147

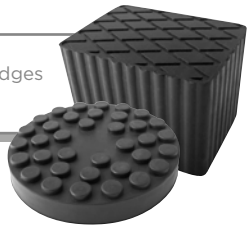

Camping cars and vans

Specifications:
- lifting height : 196-1846mm
- lifting time : +/- 45s
- lowering time: +/- 45s
- width/length of runways: 490 /5190mm
- distance between the adjustable tracks: 800-1100mm
- air supply 8bar
- drive power: 2.2kW
- Drive voltage: (3 ~) 400/50V/Hz
- concrete strength/quality: 200mm-C20/25
- maximum safety: single-cylinder lift, 4-cable drive, pneumatic release of safety catches, safety system in case of cable breakage, emergency lowering system in case of power failure, intermediate stop and sound signal
- made in Europe
- Epoxy paint

Options :
- PE0008: 1600mm boom extension
- PE7000: 3T hydropneumatic lifting crossbar

TE

THINK ABOUT IT!

PE 7000

HYDROPNEUMATIC ROLLING JACK 3T

Accessory of PE 6006/PE 6007/PE 4000/PE 4001/PE 4002/PE 4000T/PE 4001T/PE 6006M/PE 6006T/PE 4002T

Max. T 3 | 2 WARRANTY

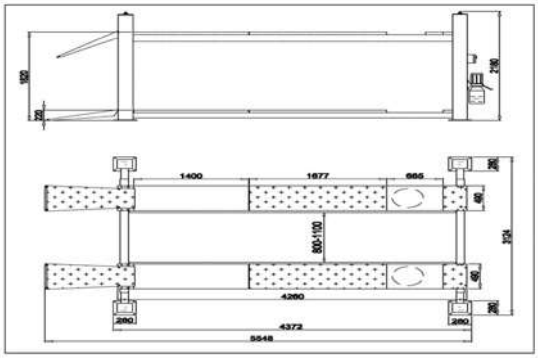

Max. T 5.5 | 400V | 2200 W | 2 WARRANTY

TE

PE 4001T

4 COLUMNS POST LIFT FLAT OSCILLATION TRACK 400V 5.5T

Electro-hydraulic post lift.
Working comfort: One-piece access ramps, quick and easy positioning of the vehicle, see ramp option for low ground clearance vehicles, allows quick repair or inspection, 5.19 m long tracks.
Equipped with guides for optional lifting crossbeam.

Spécial geometry

MADE IN EUROPE

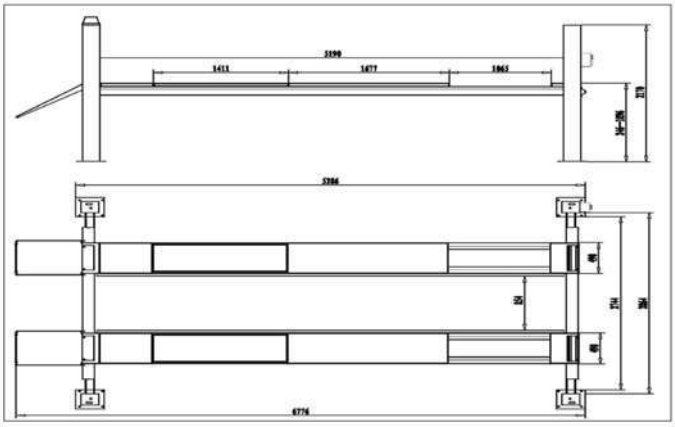

TE

THINK ABOUT IT!

PE 7000

HYDROPNEUMATIC ROLLING JACK 3T

Accessory of PE 6006/PE 6007/PE 4000/ PE 4001/PE 4002/PE 4000T/PE 4001T/PE 6006M/PE 6006T/PE 4002T

Max. T 3 | 2 WARRANTY

Specifications:
- lifting height: 246-1896mm
- lifting time: +/- 45s
- lowering time: +/- 45s
- width/length of tracks: 490-5190mm
- distance between the adjustable tracks: 800-1100mm
- air supply 8bar
- drive power: 2.2kW
- drive voltage: (3 ~) 400/50 V/Hz
- concrete strength/quality: 200mm-C20/25
- maximum safety: single-cylinder lift, 4-cable drive, pneumatic release of safety catches, safety system in case of cable breakage, emergency lowering system in case of power failure, intermediate stop and sound signal
- made in Europe
- Epoxy paint

Max. T 5.5 | 400V | 2200 W | 2 WARRANTY

PE 4002T

4 COLUMNS POST LIFT 5T AUXILIARY LIFT 3.5T

Electro-hydraulic post lift.
Working comfort: access ramps equipped with an auxiliary lift with a capacity of 3.5T with pneumatic safety.
fast and easy positioning of the vehicle with low ground clearance, allows a quick repair or inspection, 5.19m long and 640mm wide paths.
Suitable for mechanical intervention, VL, VUL, camping car, construction equipment.
European origin, powder coated.

Special geometry

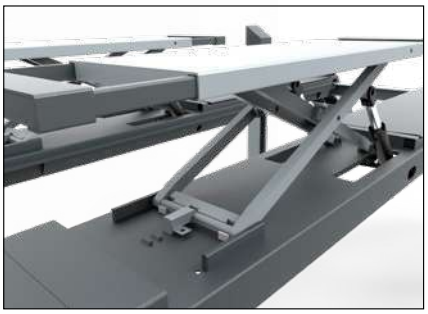

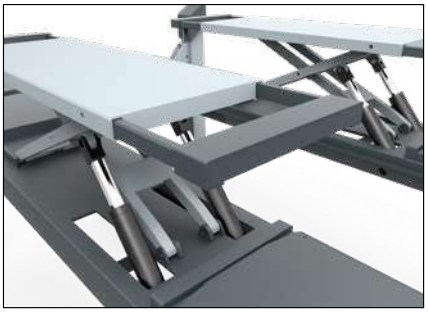

Specifications:
- lifting height : 250-1890mm
- lifting time : +/- 45s
- lowering time: +/- 55s
- track width/length: 640 /5190mm
- air supply 8bar
- drive power: 2.2kW
- drive voltage: (3 -) 400/50 V/Hz
- concrete strength/quality: 200mm-C20/25
- Made in Europe
- Epoxy paint

MADE IN EUROPE

Max. T 5 | 400V | 2200 W | 2 WARRANTY

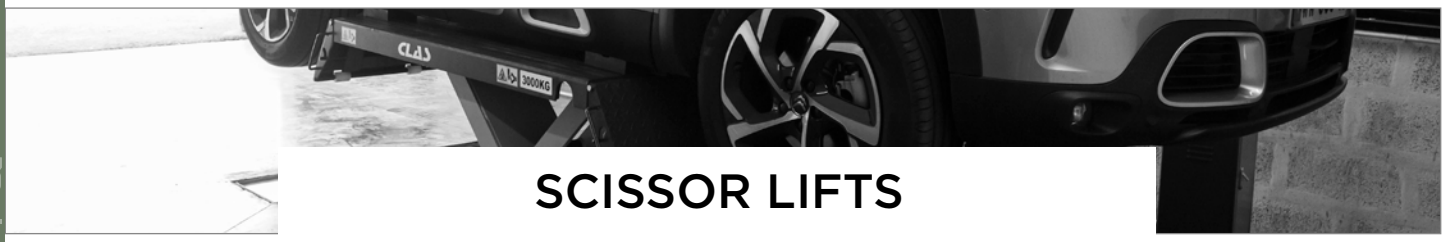

SCISSOR LIFTS

TE

FIXED OR MOBILE VERSION

PE 6000T

MOBILE SCISSOR LIFT DUAL CYLINDER LOW RAISE 400V 3T

PE 6000M

MOBILE SCISSOR LIFT DUAL CYLINDER LOW RAISE 230V 3T

PE 6002T

SCISSOR LIFT DUAL CYLINDER LOW RAISE 400V 3T

PE 6002M

SCISSOR LIFT DUAL CYLINDER LOW RAISE 230V 3T

Outdoor intervention possible

Especially adapted to painting, bodywork and brake and tyre service activities.

Ease of access: 105mm high lowered floor passage, lockable access ramps for extended lifting platforms.
Up and down control by push buttons on control box.
Working comfort: scissor control by double hydraulic master-slave system, synchronisation control by photocell, adjustable ramp spacing from 700 to 900mm, suitable for micro cars, vans and utility vehicles.
Powerful lift: extended mechanical tilt lever system, for full power lift at the lowest point 105mm.

MADE IN EUROPE

Specifications:
- lifting height : 105-960mm
- lifting time: +/- 20s
- lowering time: +/- 20s
- track width/length: 530/1450-2036mm
- system synchronization: photo cell
- drive power: 2.2kW
- drive voltage: (3 -) 400/50 V/Hz
- Scissor control: double hydraulic master-slave system
- full power lifting at the lowest point 105mm.
- maximum safety: double hydraulic safety system (without mechanical detent or compressed air)
- emergency lowering system in case of power failure
- anti-crushing intermediate stop to CE standards and sound signal
- European origin

THINK ABOUT IT!

TE

PE 0006

SUV KIT FOR SCISSOR LIFTS

Accessory of PE 6000/PE 6002/PE 6000M/ PE 6000T/PE 6002M/PE 6002T

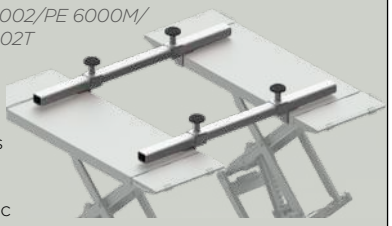

Specifications:
- set of 2 support crossbars for 4x4 underbody grip + extensions
- equipped with 2 telescopic pads lengthwise
- dimensions: L.1360xl.100xH.225mm

2 WARRANTY

Max. T 3 | 2200 W | 2 WARRANTY

MUST-HAVE

3T

PE 6001T
DOUBLE SCISSOR LIFT DUAL CYLINDER 400V 3T

PE 6001M
DOUBLE SCISSOR LIFT DUAL CYLINDER 230V 3T

3.5T

PE 6004T
DOUBLE SCISSOR LIFT DUAL CYLINDER 400V 3.5T

PE 6004M
DOUBLE SCISSOR LIFT DUAL CYLINDER 230V 3.5T

3T + mechanical safety

PE 6005T
DOUBLE SCISSOR LIFT DUAL CYLINDER WITH MECHANIC LOCK 400V 3T

PE 6005M
DOUBLE SCISSOR LIFT DUAL CYLINDER WITH MECHANIC LOCK 230V 3T

Delivered with 4 pads
h.60mm

Especially adapted to painting, bodywork and brake and tyre service activities.
Installation possibilities: floor-standing or floor built-in.

Ease of access: 100mm high lowered floor passage, lockable access ramps for extended lifting platforms
Up and down control by push buttons on control console
Powerful lift: Extended mechanical tilt lever system, for full power lift at the lowest point 100mm
Working comfort: scissors control by double hydraulic master-slave system; synchronization control by photocell.

Specifications:
- lifting height : 100-1950mm
- lifting time : +/- 40s
- lowering time: +/- 35s
- width/length of tracks: 650/1420-2000mm
- system synchronization: photo cell
- width/length of floor required for installation: 2000/2030mm
- drive power: 2.2kW
- drive voltage: (3 ~) 400/50 V/Hz
- concrete strength/quality: 200mm-C20/25
- Maximum safety: double hydraulic safety system (without mechanical lock and compressed air), emergency lowering system in case of power failure, anti-crushing intermediate stop according to CE standards and sound signal
- made in Europe

2200 W · 2 WARRANTY

THINK ABOUT IT!

PE 0001
SUV KIT FOR SCISSOR LIFTS
Accessory of PE 6001/PE 6005/ PE 6004/PE 6001M/PE 6001T/ PE 6004M/PE 6004T/PE 6005M/ PE 6005T

Specifications:
- set of 2 support crossbars for 4x4 underbody socket.
- equipped with 2 telescopic pads lengthwise
- dimensions: L.1360xW.100xH.225mm

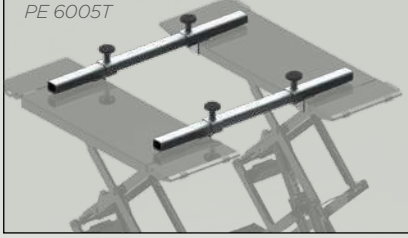

2 WARRANTY

TE

PE 6006T

EXTRA LOW PROFILE SCISSOR LIFT AUXILIARY LIFT 400V 5.5T

PE 6006M

EXTRA LOW PROFILE SCISSOR LIFT 5.5T AUXILIARY LIFT 230V 5.5T

Especially adapted for technical inspection, geometries, repair and adjustment of headlights.
Installation possibilities: floor-standing or floor built-in for LV and LCV.

Working comfort: quick and easy mounting of the vehicle on the 220mm extra-low deck.
Maximum safety: 2 thrust cylinders, 1 cylinder with mechanical secure position hold (rack and pinion) for position stabilization.
European origin, powder coated.

Extra low-profile 220mm

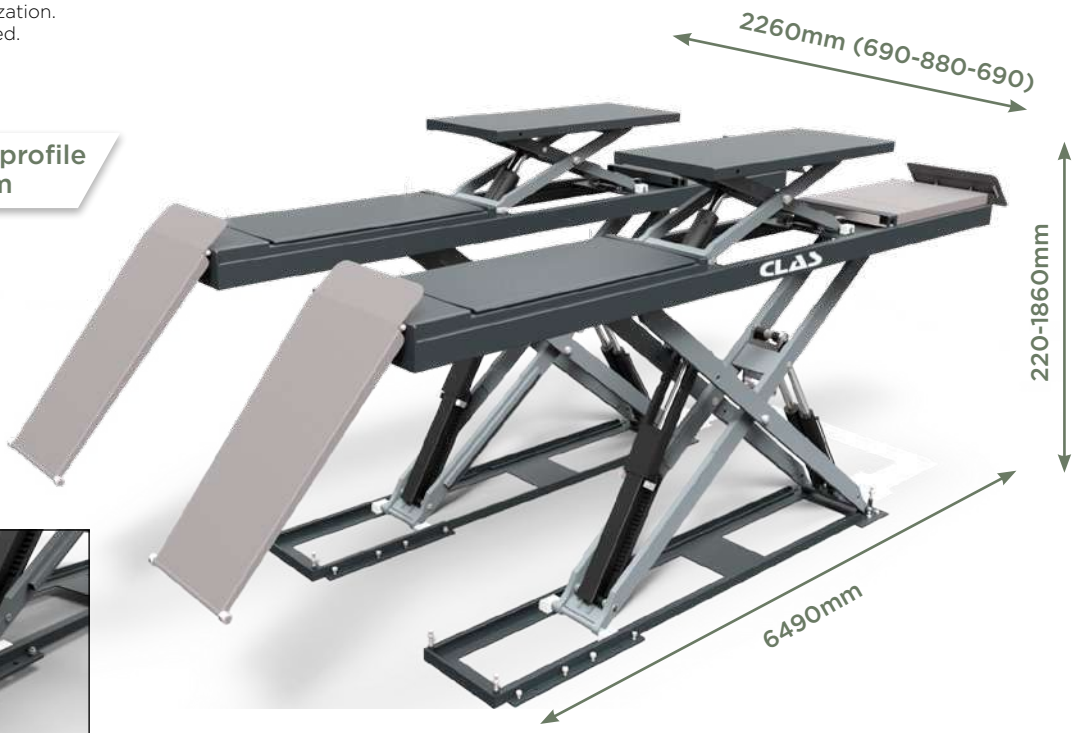

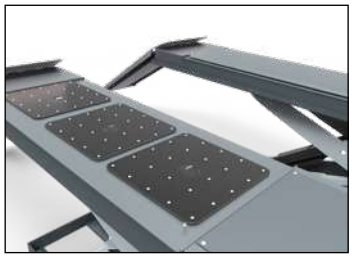

MADE IN EUROPE

Specifications:
- lifting height : 220-1860mm
- lifting time : +/- 50s
- lowering time: +/- 60s
- track width/length : 620/5030mm
- system synchronization: photo cell
- drive power: 2.2 kw
- drive voltage: (3 -) 400/50 V/Hz
- Made in Europe
- Epoxy paint

Contents:
- rear slip plates
- slots for swivel trays
- auxiliary lift 5.5T, lift height 450mm with ramp extension L: 1450mm to 2000mm
- guide rails for a lifting crossbeam

Options:
- PE7000: 3T pneumatic lifting crossbar
- EG8380: pair of turntables
- PE0004: front slip plates

TE

THINK ABOUT IT!

PE 0012

UV KIT FOR HIGH SCISSOR LIFTS

Accessory of PE 6006/PE 6007/PE 6006M/PE 6006T

Specifications:
- 2 support bars set for 4x4 under chassis + extensions

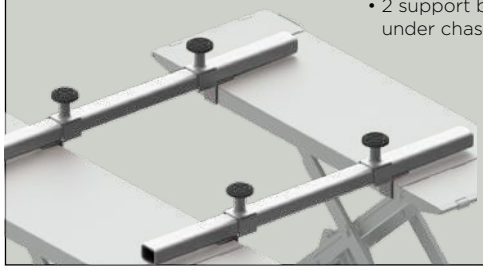

2 WARRANTY

Max. T 5.5 | 2200 W | 2 WARRANTY

PE 6007

SCISSOR LIFT 5T AUXILIARY LIFT 3.5T

Especially adapted for technical inspection, geometries, repair and adjustment of headlights.
Installation possibilities: floor-standing or floor built-in for LV and LCV.

Maximum safety: 1 push cylinder with mechanical secure position hold (rack) for position stabilization. Safety is pneumatic.
Made in Europe, powder coated.

Specifications:
- lifting height: 350-2155mm
- lifting time: +/- 65s
- lowering time: +/- 60s
- width/length raceways: 625/5400mm
- system sync: photo cell
- drive power: 2.6kw
- electrical voltage of the drive: (3 -) 400/50 V/Hz

Contents:
Slip plates
Slots for swivel trays
Auxiliary lift 3500 kg, lift height 425mm with ramp extension L: 1430mm to 2050mm
Guide rails for a lifting crossbeam

Options:
- EG8380: pair of turntables
- PE0003: 6-movement front sliding plate for technical control
- PE7000: 3T pneumatic lifting crossbar
- PE0008: access ramp extension 1600mm

Max. T 5 | 400V | 2600 W | 2 WARRANTY

THINK ABOUT IT!

TE

PE 0012

UV KIT FOR HIGH SCISSOR LIFTS

Accessory of PE 6006/PE 6007/PE 6006M/PE 6006T

Specifications:
- 2 support bars set for 4x4 under chassis + extensions

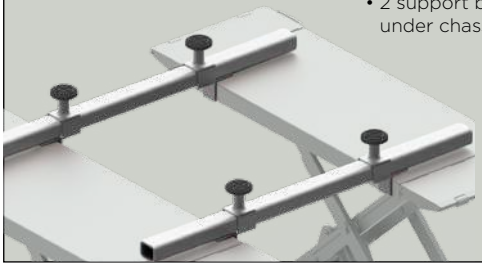

2 WARRANTY

TE

PE 8000T

BODY REPAIR LIFT TABLE MONO CYLINDER WITH MECHANIC LOCK 400V 3T

PE 8000M

BODY REPAIR LIFT TABLE MONO CYLINDER WITH MECHANIC LOCK 230V 3T

Underbody preparation table for body builders, allows the vehicle to be lifted to the desired height for an ergonomic working position, protects against MSDs.
Ideal for small dent removal, work on rocker panels, sanding, painting...
To be embedded, electro-hydraulic operation.

High elevation

Specifications:
- lifting time: +/- 50 s
- lowering time: +/- 60 s
- working height: 260-1730mm
- closed dimension: L. 2348 X W. 700mm
- max. open dimension L. 2836 X W. 1610mm
- drive power 2.2 kW 220bar
- electrical voltage of the drive: (3 -) 400V/50 Hz
- air supply 6/8bar
- single-cylinder version, with mechanical hold-in position safety device (rack and pinion).
- opening of the 4 arms equipped with 120° buffers
- European origin
- powder coated hinges
- weight: 780kg

MADE IN EUROPE

Max. T 3 | 2200 W | 2 WARRANTY

TE

PE 8001T

BODY REPAIR LIFT TABLE DUAL CYLINDER 400V 3T

PE 8001M

BODY REPAIR LIFT TABLE DUAL CYLINDER 230V 3T

Underbody preparation table for body builders, allows the vehicle to be lifted to the desired height for an ergonomic working position, protects against MSDs.
Ideal for small dent removal, work on rocker panels, sanding, painting...
To be embedded, electro-hydraulic operation,

Specifications:
- lifting time: +/- 50 s
- lowering time: +/- 60 s
- working height: 125-1300mm
- closed dimension: L. 1960 X W. 880mm
- max. open dimension: L. 2303 X W. 1668mm
- drive power 2.2 kW 220bar
- electrical voltage of the drive: (3 -) 400V/50Hz
- air supply 6/8bar
- double-cylinder version, with mechanical hold-in position safety device (rack and pinion).
- opening of the 4 arms equipped with 120° buffers
- European origin
- powder coated hinges
- weight: 880kg

MADE IN EUROPE

Max. T 3 | 2200 W | 2 WARRANTY

CHOOSE YOUR TIRE CHANGER PROPERLY.

Points of vigilance

• use: intensive or occasional?
• tire dimension in your current process?

To consider:
You may wish to install a wheel lift assistant close to your machine
to reduce MSD's (Musculoskeletal disorders).

Third arm ?
Essential support for mounting and dismounting run-flat tires, the third arm extends the range of action of the tire changers even further.
Car manufacturers, especially BMW, and manufacturers (Michelin, Dunlop, GoodYear...) are encouraging more and more of these new reinforced sidewall tires because they do not require the vehicle to be immediately immobilized in the event of a flat tire. The 3rd arm is then used as a reinforcement to get these very stiff wheels out of the rim groove without
damaging them.

AUTOMATIC OR SEMI-AUTOMATIC ?

Semi-automatic : Semi-automatic: the main column stays in its position, only the arm rotates sideways.

⊕ Reduced space requirement.

Automatic : the arm works by a pneumatic system that makes it tilt backwards by pressing the pedal. It allows to automatically center the wheel. Perfect for tire specialists.

⊕ Less effort, auto centering of the wheel, settings kept for all 4 wheels

OUR RANGE

REF	DM 0500BL	DM 1522	DM 1501	DM 2000
Easy to use on tires RunFlat type	✓	✓ ✓	✓ ✓ ✓	✓ ✓ ✓ ✓
Auto	Semi-auto	Auto	Auto	Auto
Number of speeds	1	1	2	2
3rd arm		•	•	•
Plastic head for aluminum rim				•
Wheel diameter	10-21"	10-24"	10-21"	13-28"
Wheel width	3 to 12"	3 to 12"	3 to 12"	3 to 15"
Rotation speed	6.5 trs/min	6.5 trs/min	Speed 1 : 6.5 trs/min Speed 2 : 13 trs/min	Speed 1 : 6.5 trs/min Speed 2 : 13 trs/min
Connection	230V	230V	400V	400V
Weight (kg)	177	315	315	598
Reparability				
The advantage	**Perfect for occasional use**	**Delivered assembled = ready to use**	**Add 2nd gear**	**Integrated air blaster inflating system**

TIRE CHANGERS

MUST-HAVE

DM 2000

AUTOMATIC TIRE CHANGER 13"-28" 2 SPEED SYSTEM 400V

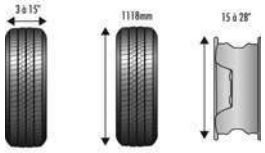

Automatic 2-speed tire changer with integrated tubeless inflator designed for effortless mounting of tires (3rd arm) and head quick fastening connection for alu/steel rim.

Tubeless inflator Delivered assembled

Integrated tubeless inflator (2x6L)

Integrated valve locker
= ergonomic workstation

Arch-shaped tray with anti-pinch safety device and jaw with inflation nozzle

Air cleaner and oil lubricator
= Automatic lubrication

Metal slide cylinder
= reliability and durability

Telescopic and swivelling 2 position take-off shovel and double acting cylinder
= adjustable according to wheel size

Supplied with:
- DM1102: dual head quick fastening connection for alu/steel
- SA8902: 5 protection covers for steel heads
- SA8903: 5 protection clips for steel heads
- SA8904: 1 blade protection cover
- SA8906: set of 4 alu jaw covers
- 1 lever with protection for alu rims

NOTE

Find our "Wheels" solutions p.200

Specifications:
- roller-supported horizontal arm
- max. wheel diameter: 1180mm
- turntable with anti-pinch device and jaw with inflating nozzle
- outside clamp: 13"-24"
- 2 speed without switch:

Turntable rotation speed 1: 6.5rpm
Turntable rotation speed 2: 13rpm

- ergonomic foot pedal
- adjustable bead breaker blade with protection and double action cylinder jack
- tubeless tire inflation is pedal-operated with a precision gauge
- working air pressure: 8-10bar
- air cleaner and oil lubricator
- tubeless inflator safety valve: 3.5bar
- tubeless tank safety valve: 10bar
- sound level < 70 dB
- power supply voltage: 400V-50Hz
- power: 0.85-1.1kW
- bead breaker arm power: 2500kg
- tire changer weight: 598kg
- dimensions: 2000x1950x2450mm

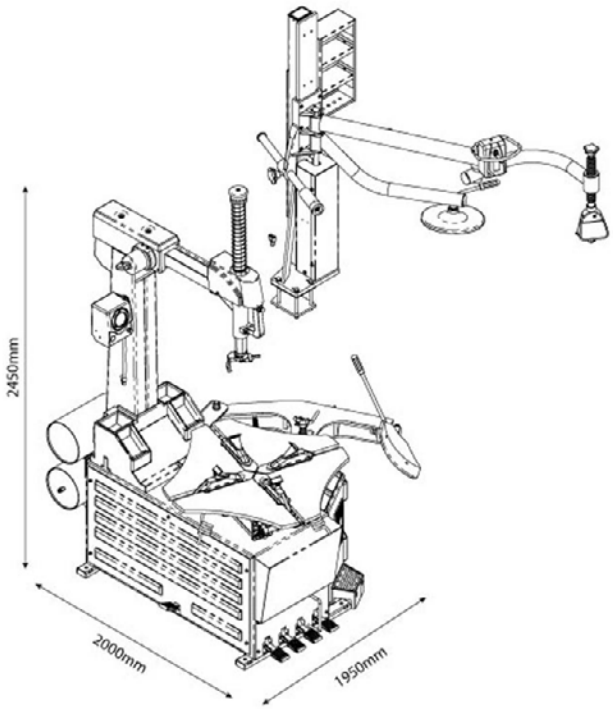

DM 0002

AUTOMATIC TIRE CHANGER 13"-28" 2 SPEED SYSTEM + WHEEL LIFTER

Flash to watch the video!

400V 1100 W 2 WARRANTY

1-speed automatic tire changer with mounting aid (assistance arm)
Automatic tire changer specially adapted for the effortless mounting and dismounting of all car, utility and 4x4 tires.
Equipped with the bead pusher device with articulated bead pusher arm, adjustable to fit to each type of rim and tires.

For warranty purposes, installation and start-up must be performed by a professional.

TE

1 SPEED

DM 1522

AUTOMATIC TIRE CHANGER 10"-24" 1 SPEED
SYSTEM 230V

Delivered assembled

Specifications:
- roller-supported horizontal arm
- inflator with pressure gauge
- max. wheel diameter: 1180mm
- tire width: 3"-12"
- turntable with anti-pinch device
- outside clamp diameter: 10"-21"
- inside clamp diameter: 12"-24"
- turntable rotation speed: 6.5rpm
- ergonomic foot pedal
- adjustable 2 positions bead breaker blade with protection and double acting cylin
- working air pressure: 8-10bar
- air cleaner and oil lubricator
- tubeless inflator safety valve: 3.5bar
- sound level < 70 dB
- power supply voltage: 230V
- power: 0,75kW
- bead breaker arm power: 2500kg
- tire changer weight: 315kg
- dimensions: 1850x1800x1980mm

230V 750 W 2 WARRANTY

DM 0522

AUTOMATIC TIRE CHANGER 10"-24" **1 SPEED SYSTEM 230V** + WHEEL LIFTER

+

Comes with:
- SA8902: 5 protection pads
- SA8903: 5 protective clips
- SA8904: 1 blade protection cover 260x80mm
- SA8906: 4 pieces jaw cover set
- 1 lever with protection for alu rims

Options:
- DM1102: dual head quick fastening connection for alu/ steel

TE

2 SPEEDS

DM 1501

AUTOMATIC TIRE CHANGER 10"-24" 2 SPEED SYSTEM 400V

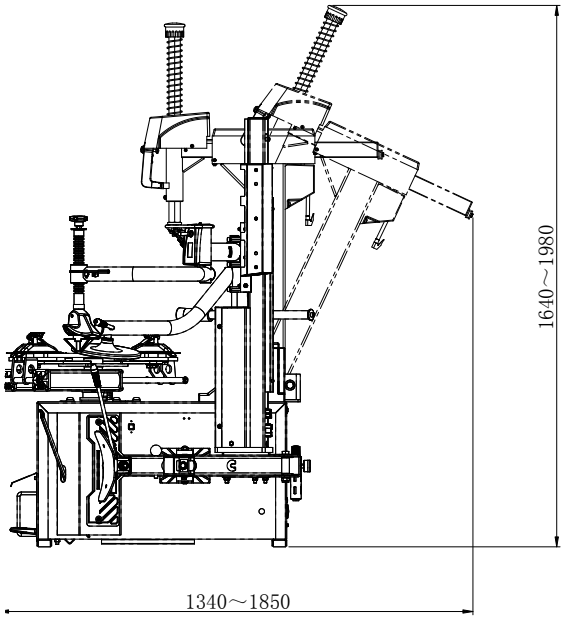

SCHEMA DM 1522-DM 1501

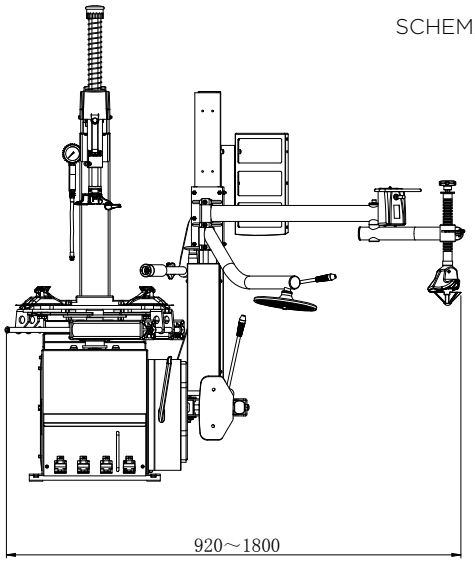

Specifications:
- roller-supported horizontal arm
- inflator with pressure gauge
- max. wheel diameter: 1180mm
- tire width: 3"-12"
- turntable with anti-pinch device
- outside clamp diameter: 10"-21"
- inside clamp diameter: 12"-24"
- turntable rotation speed: 6.5rpm
- 2 speeds without switch:
turntable rotation speed 1: 6.5rpm
turntable rotation speed 2: 13rpm
- ergonomic foot pedal
- adjustable 2 positions bead breaker blade with protection and double acting cylinder jack
- working air pressure: 8-10bar
- air cleaner and oil lubricator
- tubeless inflator safety valve: 3.5bar
- sound level < 70 dB
- power supply: 400V-50Hz
- power: 0.85-1.1kW
- bead breaker arm power: 2500kg
- dimensions: 1900x1580x2000mm

400V | 1100 W | 2 WARRANTY

TE

DM 0501

AUTOMATIC TIRE CHANGER 10"-24" **2 SPEED SYSTEM 400V** + WHEEL LIFTER

+

2 WARRANTY

TE

DM 0500BL

SEMI-AUTOMATIC TIRE CHANGER 10"-21" 1 SPEED SYSTEM 230V

Semi automatic tire changer designed for effortless mounting and removal of tires. Suitable for cars, commercial vehicles and 4x4 tires.

For warranty purposes, installation and start-up must be performed by a professional.

B.LINE USE

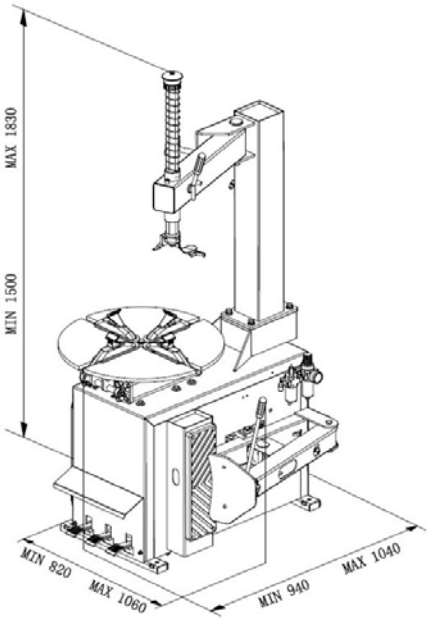

Specifications:
- max. tire width: 3"-12"
- outside clamp: 10"-18"
- inside clamp: 12"-21"
- turntable rotation speed: 6.5rpm
- ergonomic and intuitive foot pedal
- working air pressure: 8-10bar
- air purifier and oil lubricator
- tubeless inflator safety valve: 3.5bar
- power: 0.85-1.1kW
- bead breaker arm power: 2500kg
- weight: 177kg

Comes with:
- SA0172: plastic protection for the dismounting heads soles
- SA8903: 5 protective clips
- SA8906: 4 pieces jaw cover set
- 1 lever with protection for alu rims

230V 1100 W 2 WARRANTY

TE

DM 0050BL

SEMI-AUTOMATIC TIRE CHANGER 10"-21" + WHEEL LIFTER

DM 0500BL + DM 0000

2 WARRANTY

TN

DM 1102

DUAL HEAD QUICK FASTENING CONNECTION FOR ALU/STEEL

Accessory of DM 2000/DM 0500BL/DM 1501/DM 1522

Allows plastic and steel heads to be changed thanks to the threaded-ring retaining system without tools.

Contents:
- female machine adaptor
- male adaptor for original head
- SA1190: plastic head

NO WARRANTY

TN

DM 0200

ROLL PLATFORM FOR BEAD BREAKER

Accessory of DM 2000/DM 1000/DM 1500/DM 0500BL/DM 0550BL/DM 1050/DM 1020/DM 1250/DM 1520/DM 1501/DM 1521/DM 0500BLP/DM 2000P

Easy wheel rotation while using the bead breaker.
Attach to the ground at the same level as the detaching shovel.

2 WARRANTY

SA 8901	STEEL HEAD REMOVAL ASSEMBLY
SA 8907	STEEL HEAD FOR AUTOMATIC TIRE CHANGER SICAM/M&B/BEISSBARTH
SA 8908	STEEL HEAD FOR AUTOMATIC TIRE CHANGER GIULIANO/CEMB/CORMACH/CORGHI
SA 8909	STEEL HEAD FOR AUTOMATIC TIRE CHANGER GS/SNAPON/HOFMANN/JOHN BEAN
SA 1183	PLASTIC HEAD

TE

DM 0000

WHEEL LIFTER FOR TIRE CHANGER

Accessory of DM 1501/DM 1522/DM 2000/DM 0500BL

Ergonomic
Limits the risk of MSD

This tool, which works with most of the tire changers of the market, will allow you to work quickly and without any extra effort.

Thanks to its pneumatic foot-operated control, you can lift and rotate the wheel horizontally to position it on the tire changer table. Therefore, the operation of positioning the wheel on the table will be done easily with a minimum of physical effort, thereby limiting the risk of MSD (musculoskeletal disorders).

Specifications:
- maximum load: 70kg
- max lifting height : 780mm
- platform width : 305mm

Max. Kg 70 | 2 WARRANTY

TN

DM 1104

4 MOTORBIKE JAW SET

Accessory of DM 2000/DM 0500BL/DM 1501/DM 1522

Protected rims

Installation on jaws with a max. width of 45mm.

2 WARRANTY

TN

SA 0115

PLASTIC CHISEL

Spare part of OC 0112

NO WARRANTY

TN

OP 0659

19l TIRE BEAD BLASTER
CAR/LCV/HGV

Specifications :
- steel tank 19l
- barrel width: 80mm
- discharge: valve (1.5") 1/4 turn
- handle in upper position
- pressure gauge 0-16bar
- safety valve 6.0bar
- working pressure: 7.5bar
- weight : 12kg

19 L — 2 WARRANTY

TN

OP 0679

12l ALUMINUM AIR BLASTER/BAZOOKA

Allows the tire bead to be placed on the wheel rim.

Light and ergonomics

Specifications:
- aluminum tank 12L
- PU barrel, does not damage rims
- barrel width: 80mm
- 45° ergonomic handle
- pressure gauge 0-15bar
- 7.5bar safety valve
- operating pressure: 7.5bar
- weight: 4,05kg

Supplied with PU barrel and metal barrel

12 L — 2 WARRANTY

TN

OP 0046BL

INFLATING GUN 0-12bar

B.LINE — USE

Scale of 0 to 12 bar
Flexible length: 50mm

NO WARRANTY

TN

OP 0049

INFLATOR GUN 0.7-12bar

- for passenger cars and vans.
- complies with directive 86/217/EEC
- standard UNI EN 12645
- graduations of 0.7 to 12bar

2 WARRANTY

TN

DM 1101

PRESS ASSIST DEVICE FOR LOW PROFILE OR RUN FLAT TIRES

Accessory of DM 2000/DM 1501/DM 1522/DM 0500BL

Easy positioning of the second tire bead.

Flash to watch the video!

NO WARRANTY

TN

DM 0109

PLASTIC EDGE PROTECTOR FOR ALUMINUM RIMS

NO WARRANTY

TN

DM 1303

TRANSLUCENT TIRE MOUNTING CREAM 5kg

Does not freeze in the pot

Ensures fast & precise centering of the tire on the rim thanks to its superior lubricating power
Easy and precise application with brush
Keeps its lubricating power even if the pot stays open
Fast drying avoiding any rotation on rim
Invisible, leaves no traces on the tire or the rim
Limits corrosion formation and tire sticking on the rim

Following the 67/548/CEE and 1999/45/CE directives, this translucent mounting cream is not classified as a dangerous product and does not contain substances presenting danger.

Specifications:
- non-irritating (chemically neutral)
- does not damage rubber
- does not damage paints
- suitable for any tire type

NO WARRANTY

TN

DM 1306

Ø30mm ELBOW BRUSH FOR MOUNTING CREAM

Increased precision

Allows a more precise application while using the bead breaker.

Specifications:
- length: 270mm
- tough plant-based bristle
- wooden handle

NO WARRANTY

TN

OM 0255

TIRE REMOVER SHEATHED L.495mm

Accessory of DM 2000/DM 0500BL/DM 1501/DM 1522/EQ 1000

Allows to tires to be removed without causing damage to rims.
The removable plastic base (6mm thick) is held by 4 screws on the steel part.

Specifications:
• Polycarbonate coating on the back side

Anti-scratch!

SA 0355 PROTECTIVE SHEATH

NO WARRANTY

OM 0259

TIRE REMOVER L.650mm

Accessory of DM 2000/DM 0500BL/DM 1501/DM 1522

NO WARRANTY

DM 1305

MOTORBIKE TIRE REMOVER WITH HANDLE L.425mm

Accessory of DM 0550BL/DM 1501/DM 1522

NO WARRANTY

TN

OM 7008

2-IN-1 REVERSIBLE VALVE/ VALVE CORE REMOVAL

• Easy-grip resin handle
• Valve core removal tool
• Valve puller

NO WARRANTY

TN

OM 1316

SILENT VALVE CORE REMOVER

Considerably reduces the risk of hearing damage.
Clips onto the valve: one-handed valve core removal.
Protects the operator against projections from the valve core or from particles present in the tire.
Restraint system.

Silent: noise levels limited to 85dB

2 WARRANTY

TN

DM 1308

VALVE CUTTING PLIERS

Allows quick, neat and precise cuts to be made to the valves, thus facilitating their extraction.45° head perfectly matching the tilt of the valve for improved user comfort.

Specifications:
Max. opening: 30mm
Width of the cut: 18mm
Length: 230mm

2 WARRANTY

CHOOSE YOUR WHEEL BALANCER PROPERLY.

Points of vigilance

• use: intensive or occasional?
• tire dimension in your current process?

To consider:
You may wish to install a wheel lift assistant close to your machine
to reduce MSD's (Musculoskeletal disorders).

Manual : Enter the offset, the rim width and the diameter on the keyboard. Perfect for occasional use or low volume tires.

Automatic : the measurements are detected and recognized by the machine. The automatic wheel balancers are supplied with a laser pointer which serves as a guide for positioning the balancing weight. Perfect for tire specialists or mounting centers

3D screen ?
The 3D screen allows a comfortable operation with visualization of the mass position on the screen. The information on the balancing in progress is accessible in real time.

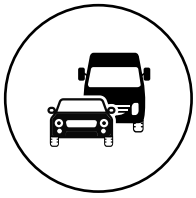

All of our wheel balancers are suitable with light vehicles, commercial vehicles and motorcycles.

The electromagnetic brake allows to stop the wheel directly at the right place, without manual adjustment.

OUR RANGE

REF	EQ 0500BL	EQ 1000	EQ 2100
Measurement of the 3 settings (offset, diameter, width)	Manual	Manual	Automatic
Electro-magnetic brake			•
Shaft diameter	**40 mm**	**40 mm**	**40 mm**
Shaft length	**205 mm**	**210 mm**	**210 mm**
LED inner rim light			•
Laser pointer (for weight positioning)			•
Wheel width	Max 30"	Max 28"	Max 28"
Connection	60 kg	149 kg	149 kg
Weight (kg)	230V	230V	400V
Reparability			
The advantage	**Perfect for occasional use**	**Various programs**	**Fast operation**

WHEEL BALANCERS

TE

EQ 0500BL

MANUAL MOTORIZED WHEEL BALANCER LED SCREEN

NEW

Wheel balancing machine designed for dynamic or static balancing of LV-LCV-4X4 wheels in a single measurement step. The advantage of the machine is its modern and ergonomic design. The intuitive calibration system simplifies the work and improves the balancing accuracy. The machine is equipped with a LED display. Manual setting of the data.

B.LINE USE

Specifications:
- European software
- automatic cycle
- multifunctional buttons
- static and dynamic program (2 planes) in one run
- 6 Alu programs (+ Optimization, Static, Motorcycle, Hidden weight)
- auto calibration/Calibration
- self-diagnosis: fault code
- simultaneous display of weights and mass positions
- measurement accuracy : ±1g
- display accuracy : 5g

Specifications:
- power supply: 230V-50Hz
- power: 80W
- dimensions open case: 880x980x1420mm
- LED display
- maximum wheel weight: 70kg
- maximum rim diameter: 30 inches
- rim width: from 2 to 15 inches
- manual measurement of the 3 parameters: offset-diameter-width
- safety casing
- rotation speed: 140rpm/min
- shaft: L.205mm-Ø40mmx4mm
- compartmentalized tray for cones and masses
- 4 storage supports
- noise level < 69dB
- weight: 60kg

Delivered with:
- quick nut
- 3 cones: 42-64,5/54-79,5/74-111,5 Ø40mm
- calibration tool

230V 80 W 2 WARRANTY

TN

EQ 0501BL

MOTORCYCLE SHAFT ADAPTER Ø19mm WITH CONES

Accessory of EQ 0500BL

NEW

2 WARRANTY

TN

EQ 0502BL

MOTORCYCLE SHAFT Ø14mm WITH CONES

Accessory of EQ 0500BL/EQ 0501BL

NEW

2 WARRANTY

EQ 1000

MOTORIZED WHEEL BALANCER WITH DIGITAL DISPLAY

Motorized wheel balancer equipped with a large digital display and manual measurement of 3 parameters for precise, simple and rapid work on wheels for LV, LCVs and 4x4s.

NOTE

EQ 1000 pack with wheel lift p.37

NOTE

Dimensions: see diagram of EQ 2100 p. 36

Functions:
- european software
- automatic cycle
- multipurpose keys
- static and dynamic program (dual plane) in a single measuring run
- 9 modes: 7 Alu (hidden weight)+Optimization+Motocycle balancing
- automatic reset/Machine calibration: 50g weights
- auto diagnostic with error codes
- multiple operator function
- simultaneous display of weights and weight positions
- measuring precision: ±1g
- display precision: 1g/5g

Specifications:
- power supply voltage: 220V-50Hz
- dimensions (wheel guard opened): 1550x1160x1490mm
- sound level < 69dB
- digital display (automatic standby mode if the machine is not being in use after 5min)
- max. wheel diameter: 1100mm
- max. wheel weight: 70kg
- rim diameter: 1-28"
- rim width: 1.5-20"
- wheel 3 parameters manual measurement
- automatic wheel guard
- one balance time: 7s
- rotating speed: 140rpm
- shaft: L.210mm-Ø40mmx4mm
- ergonomic and functional weight holder top with large trays for different types of counterweights and tools.
- 4 storage media
- support of positioning weight
- weight: 149kg

Supplied with:
- EQ6521BL: 4 counterweights from 42 to 137mm Ø40mm
- 12mm hex wrench
- SA8305: rim width caliper
- SA8905: calibration weight 50g
- OC8034: tire pliers
- EQ6404BL: fast nut Ø40x4mm with bowl/joint/compression ring

230V 90 W 2 WARRANTY

MUST-HAVE

EQ 2100

AUTOMATIC WHEEL BALANCER 3D DIGITAL DISPLAY+LASER POINTER

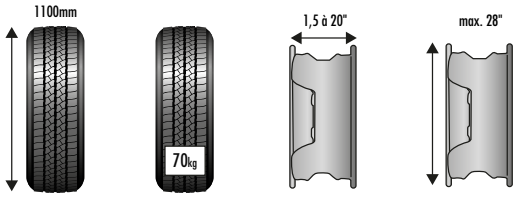

Motorized wheel balancer with a large digital display.
Measures 3 parameters automatically for precise, simple and quick wheel balancing for cars, LCVs and 4x4s.

Laser pointer
Electromagnetic brake

Supplied with:
- EQ6521BL: 4 counterweights from 42 to 137mm Ø40mm
- 12mm hex wrench
- SA8305: rim width caliper
- SA8905: calibration weight 50g
- OC8034: tire pliers
- EQ6404BL: fast nut Ø40x4mm with bowl/joint/compression ring

SA 8305

EQ 6521BL

OC 8034

SA 8905

EQ 6404BL

Functions:
- european software
- automatic cycle
- multipurpose keys
- static and dynamic program (dual plane) in a single measuring run
- 9 modes: 7 Alu (hidden weight) +Optimization+Motorcycle balancing
- automatic reset/machine calibration: 50g weights
- auto diagnostic with error codes
- multiple operator functions
- simultaneous display of weights and weight positions
- automatic stop on weight position with LED lighting inside the rim
- electromagnetic brake which can be locked if required
- measuring precision: ±1g
- display precision: 1g/5g

Specifications:
- power supply voltage: 220V-50Hz
- motor power: 90W
- dimensions (wheel guard opened): 1550x1160x1490mm
- sound level < 69dB
- digital display (automatic standby mode if the machine is not being used after 5min)
- max. wheel diameter: 1100mm
- max. wheel weight: 70kg
- max. rim diameter: 28"
- rim width: 1.5-20"
- automatically measures 3 parameters: protrusion, diameter, width
- laser pointer for mass positioning
- automatic wheel casing with automatic ignition
- duration of measurement cycle: 7s
- rotating speed: 140rpm
- shaft: L.210mm-Ø40mmx4mm
- ergonomic and functional weight holder top with large trays for different types of counterweights and cones.
- 4 storage media
- clip to position weights
- weight: 149kg

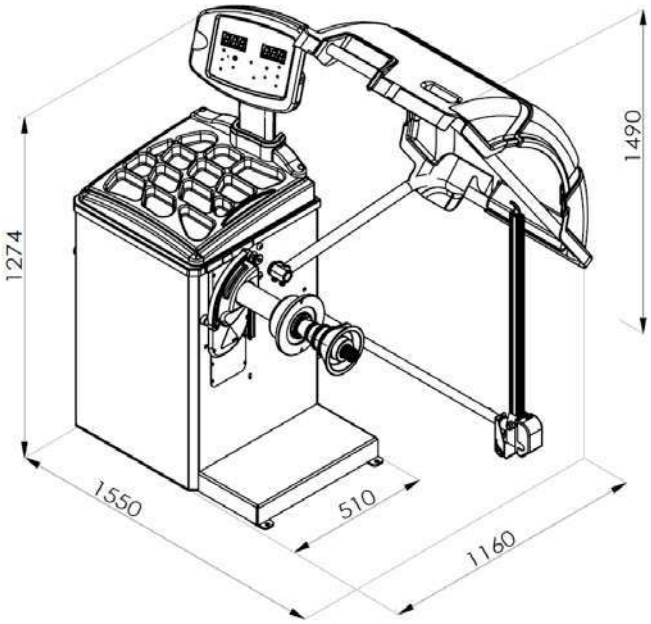

220V | 90 W | 2 WARRANTY

TE

EQ 0021

AUTOMATIC WHEEL BALANCER LASER POINTER + WHEEL LIFTER

EQ 2100

EQ 0000

+

EQ 0010

MOTORIZED WHEEL BALANCER WITH DIGITAL DISPLAY + WHEEL LIFTER

EQ 1000

+

EQ 0000

2 WARRANTY

TN

EQ 1634

MOTORBIKE KIT+Ø14mm SHAFT+CONES Ø16-34mm+RINGS Ø16mm

Accessory of EQ 1000/EQ 2100

Supplied with calibration weight 50g (SA8950)

SA 1634	DEPORT EXTENSION FOR MOTO KIT	Spare part of EQ 1634
SA 8950	CALIBRATION WEIGHT 50g FOR MOTORBIKE KIT	Spare part of EQ 1634

2 WARRANTY

TN

	EQ 6400BL	CYLINDRICAL UNIVERSAL CENTERING PLATE Ø40mm	Accessory of EQ 1000/EQ 2100
	EQ 6404BL	QUICK NUT Ø40x4mm WITH BOWL/SEAL/ RING	
	SA 8305	RIM WIDTH CALIPER	Spare part of EQ 1000/EQ 2100 Accessory of EQ 0500BL
	OC 8034	MULTIFUNCTIONAL TIRE PLIERS	
	EQ 6521BL	4 CENTERING CONE SET Ø42-137mm Ø40mm	Spare part of EQ 1000/EQ 2100
	EQ 8093	LCV CENTERING CONE Ø118-174mm+SPACER DISK Ø40mm KIT	Accessory of EQ 1000/EQ 2000/EQ 1050/EQ 2100

NO WARRANTY

TE

EQ 0000

WHEEL LIFTER FOR WHEEL BALANCER

Accessory of EQ 1000/EQ 2100/EQ 0500BL

Ergonomic
Limits the risk of MSD

Flash to watch the video!

Max. Kg 80 | 2 WARRANTY

WHEEL & TIRE HANDLING

TE

OE 9000

ELECTRIC & RECHARGEABLE WHEEL LIFTER MAX. 60kg

Allows wheels for cars, LCVs and 4x4s to be effortlessly lifted to the height of the vehicle on the ramp.
Allows wheels to be moved around the workshop.
Low center of gravity increases stability.

Compatible with scissor lifts

Specifications:
- lifting capacity: 60kg
- wheels 135/80 R13 to 295/25 R22
- max height of the hub: 145cm
- up/down control integrated in the handle
- lifting speed: 0.14m/s
- lifting system-motorized screw
- 4 swiveling wheels for greater maneuvrability
- anti-fall security feature
- emergency stop button
- reels to facilitate rotation to position the wheel on the hub
- lED indicators:

Battery charge level
Max. charge capacity exceeded
- emergency stop function deployed
- engine temperature of the upper screw
- batteries 12V 12Ah
- charger: 220V-AC
- dimensions: L.725xW.800xH.1710mm

Limits the risks of accident
Lifts wheels effortlessly

Max. Kg 60 | 12V | 2 WARRANTY

TN

EG 0112

DISPLAY TIRES

Up to 10 tires

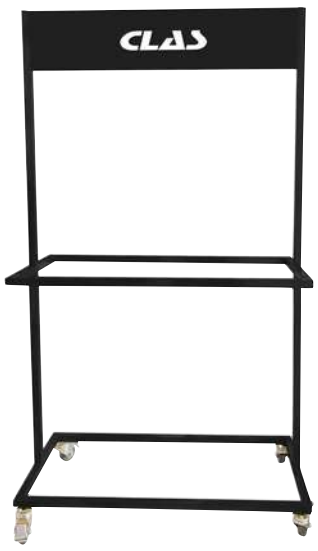

Specifications:
- support for up to 10 tires
- metal
- 2 braked wheels
- level height 760mm
- interaxial 450mm
- dimensions: L.1060xW.510xH.1910mm

2 WARRANTY

TN

OH 9001

WHEEL LIFTER HGV

Secured wheel

Mounted on 3 swiveling wheels
Lifts wheel using hydraulic piston (max. 650kg)

Specifications:
- length: 1161mm
- width: mini-maxi 2080x565x1500mm or 1161x565x1500mm
- ground clearance: 150mm

Max. Kg 650 | 2 WARRANTY

TN

OM 9002

TIRE REMOVER HGV

Reduces MSD.

The lifting dolly is the easiest and safest way to install and uninstall the wheels of LCV and HGV vehicles.

It uses simple leverage principles so that the user provides as little physical effort as possible.
This cart allows the user to use their body weight to push the handle down to relieve the wheel from the studs.

Easy installation and removal of truck wheel/tire assemblies
3 positions for the rollers according to the size of the tyres
Prevents damage to wheel studs
For all wheels from 6.5" to 24.5".

Specifications:
- arm width: 500mm
- depth: 350mm

Max. Kg 250 | 2 WARRANTY

TN

OH 9000

WHEEL LIFTER HGV/PUBLIC WORKS/AGRICULTURAL

Wheel lifting by hydraulic cylinder (1200kg maximum).

Wide wheel compatible

Specifications:
- height: min.1375mm-max.2175mm
- length: 940mm
- width: min.1200mm-max.1970mm
- ground clearance: 175mm
- roller length: 500mm
- space between rollers: min.720mm-max.1250mm
- rollers: Ø76mm
- capacity wheel Ø: min.1000mm-max.2200mm
- depth of wheels: 800mm maximum
- dolly wheels: 4 big wheels PU Ø145x50mm including 2 swivel wheels with brakes

Max. T 1.2 | 2 WARRANTY

CHOOSE YOUR COMPRESSOR PROPERLY.

Key points to consider:

There are different types of compressors, the choice depends on the expected use and/or the number of devices to be supplied.

• use: private, professional, tire

specialist...?
• technology?
• engine power?

TO CONSIDER :

1m3/h = 16.67 l/min
To calculate the required air flow, multiply the consumption of your tools by 1.5.

EXPERT ADVICE

• Dryer
Required when using tools that require dry air such as painting tools.
The dryer should be selected according to the flow rate of the applied compressor.

• Filtration
Required for the system depolluting, used for painting applications.
The filters should only be used with a dryer.
Service: annual filter replacement.

THE DIFFERENT TYPES OF COMPRESSORS

PISTON AIR COMPRESSORS

• Direct or coaxial drive: the head is directly powered by the engine. An economical solution for occasional use.
• Belt drive: Independent engine and compressor. Possibility of low-speed operation and soundproofed version.
• Intermittent use.

SCREW AIR COMPRESSORS

• regular use at a constant flow rate.
• reduced mechanical strain and friction, which makes it more robust.
• powerful and quiet

Economical, wide range of choices

Durable

REF	Technology	Capacity	Engine power (CV)	Pressure (bar)	Flow rate (l/min)	Use
OP 6253	piston	20 L	1.5	10	230	Industrial
OP 6254	piston	20 L	2.5	10	460	
OP 6255	piston	20 L	2	10	280	
OP 3603	piston	50 L	2	8	240	Private
OP 3600	piston	100 L	3	10	320	Additional or mobile use
OP 3601	piston	150 L	3	10	320	
OP 3602	piston	200 L	3	10	320	Professional: 1 companion
OP 3604	piston	270 L	5.5	11	650	Professional: 2 to 3 companions
OP 3605	piston	500 L	5.5	11	600	Professional: 3+ companions
OP 3606	piston	500 L	10	11	1100	
OP 3612	piston	270 L	7.5	11	850	
OP 3608	piston	-	7.5	11	850	
OP 3606	piston	500 L	10	11	1182	
OP 3609	piston	-	10	11	1182	
OP 3610	screw	-	15	10	1500	Tire & body specialists
OP 3622	screw	-	10	10	1000	
OP 3611	screw	-	20	10	2000	

PISTON AIR COMPRESSORS

TE

Two-cylinder piston compressor, ideal for working in special environments where no lubricant is required.

NEW

Allows continuous dry air operation with very little maintenance.

Hand truck size, ideal for outdoor use

OP 6253

AIR COMPRESSOR
UNLUBRICATED 20l 1.5HP

Specifications:
- tank: 20L
- ventilated cooling
- 1450 rpm
- volume generated: 230l/min
- max pressure: 10bar
- engine power : 1.5hp-1.1kW
- twin-cylinder
- power supply : mono 230V
- weight : 33kg

1.5 HP | 75 dB | 20 L | 230V | 2 WARRANTY

Heavy duty industrial application

OP 6254

AIR COMPRESSOR
UNLIBRICATED 20l 2.5HP

Specifications:
- tank: 20L
- ventilated cooling
- 2850 rpm
- volume generated: 460l/min
- max pressure: 10bar
- engine power : 2.5hp-1.8kW
- twin-cylinder
- power supply : mono 230V
- weight : 34kg

2.5 HP | 75 dB | 20 L | 230V | 2 WARRANTY

TE

OP 6255

AIR COMPRESSOR
UNLUBRICATED 20l 2HP

NEW

Two-cylinder piston compressor, ideal for working in special environments where no lubricant is required.

Allows continuous dry air operation with very little maintenance.

Hand truck size, ideal for outdoor use

Specifications:
- tank: 20L
- ventilated cooling
- 1450 rpm
- volume generated: 280l/min
- max pressure: 10bar
- engine power : 2hp-1.8kW
- three-cylinder
- power supply : mono 230V
- weight : 38kg

2 HP | 69 dB | 20 L | 230V | 2 WARRANTY

TE

OP 3603

AIR COMPRESSOR 50l 2HP

Specifications:
- volume generated: 240l/min
- 2850 rpm
- max pressure: 8bar
- engine power: 2cv-1.5kW
- power supply: mono 230V
- cast iron group
- handle for manipulation
- purifier regulator

2 HP | 72 dB | 50 L | 230V | 2 WARRANTY

TE

OP 3600

AIR COMPRESSOR 100l 3HP

3 HP | 74 dB | 100 L | 230V | 2 WARRANTY

OP 3601

AIR COMPRESSOR 150l 3HP

3 HP | 74 dB | 150 L | 230V | 2 WARRANTY

Specifications:
- belt drive
- volume generated: 320 l/min
- 1500 rpm
- max pressure: 10bar
- engine power: 3cv-2.2kW
- twin-cylinder
- electrical supply: mono 230V
- equipped with regulator
- visible oil level

OP 3602

AIR COMPRESSOR 200l 3HP

3 HP | 74 dB | 200 L | 230V | 2 WARRANTY

TE

OP 3604

AIR COMPRESSOR 270l 5.5HP

Soundproof

Specifications:
- slow running
- belt drive
- 1150 rpm
- volume generated: 650l/min
- max pressure: 11bar
- engine power: 5.5hp-4kW
- twin-cylinder
- electrical supply: tri 400V

5.5 HP | 69 dB | 270 L | 400V | 2 WARRANTY

TE

OP 3605

BELT COMPRESSOR 500l 7.5HP

Specifications:
- belt drive
- dual cooling collectors for maximum efficiency
- 1450 rpm
- volume generated: 600l/min
- max pressure: 11bar
- engine power: 5.5hp-4kW
- twin-cylinder
- electrical supply: tri 400V

5.5 HP | 78 dB | 500 L | 400V | 2 WARRANTY

OP 3606

COMPRESSOR SPEED 500l 10HP

Specifications:
- belt drive
- dual cooling collectors for maximum efficiency
- 1100 rpm
- volume generated: 1182l/min
- max pressure: 11bar
- engine power: 10hp-7.5kW
- twin-cylinder
- electrical supply: tri 400V

10 HP | 77 dB | 500 L | 400V | 2 WARRANTY

TE

OP 3608

SILENT BELT COMPRESSOR 7.5HP

Specifications:
- belt drive
- integrated 3-litre tank mounted on vibration dampers
- dual electric ventilators with thermostatic control
- easily readable hour counter
- 1150 rpm
- volume generated: 850 l/min
- max pressure: 11bar
- engine power: 7.5hp-5.5kW
- twin-cylinder
- electrical supply: tri 400V

7.5 HP | 68 dB | 400V | 2 WARRANTY

OP 3609

SILENT BELT COMPRESSOR 10HP

Specifications:
- belt drive
- integrated 3-litre tank mounted on vibration dampers
- dual electric ventilators with thermostatic control
- easily readable hour counter
- 1100 rpm
- volume generated: 1182 l/min
- max pressure: 11bar
- engine power: 10hp-7.5kW
- twin-cylinder
- electrical supply: tri 400V

10 HP | 68 dB | 400V | 2 WARRANTY

TOP PRODUIT

TE

OP 3612

VERTICAL COMPRESSOR 270l 7.5HP

Specifications:
- belt drive
- 1150 rpm
- volume generated: 850 l/min
- max pressure: 11bar
- engine power: 7.5hp-5.5kW
- twin-cylinder
- electrical supply: tri 400V

Low space requirement

7.5 HP | 76 dB | 270 L | 400V | 2 WARRANTY

SCREW AIR COMPRESSORS

TE

The screw compressor will allow you to work with a maximum of air for a minimum of energy consumption. This solution has a long service life and we recommend it for intensive use.
The compressor has been designed to operate continuously under the most demanding conditions of use: tire operators, multiple journeymen, extensive air networks, numerous downpipes and end connections...
Particular attention has been paid to the design of this equipment in order to respond to daily problems: low maintenance costs and ease of use.

OP 3610

AIR COMPRESSOR 15HP ON TANK + DRYER

Specifications:
- volume generated: 1500 l/min
- tank: 500L
- dryer included
- max pressure: 10bar
- engine power: 15hp-11kW
- electrical supply: tri 400V

15 HP | 68 dB | 500 L | 400V | 2 WARRANTY

Long life in intensive use

OP 3622

SCREW AIR COMPRESSOR 10HP

Specifications:
- 1000 l/min
- tank: 500L
- air dryer included
- max pressure: 10bar
- motor power: 10cv-7.5kW
- power supply: tri 400V

NEW

10 HP | 66 dB | 500 L | 400V | 2 WARRANTY

TE

OP 3611

AIR COMPRESSOR 20HP

Long life in intensive use

Specifications:
- volume generated: 2000 l/min
- max pressure: 10bar
- engine power: 20hp-15kW
- electrical supply: tri 400V

20 HP | 68 dB | 400V | 2 WARRANTY

TE

VERTICAL TANK

Our tanks are supplied with safety valves and pressure gauges as a standard feature. On request, we can supply plugs, fittings and hoses.

NEW

Storage in a wet environment

REF	Tank	Capacity	Pressure (bar)	Diameter	Height (mm)	Weight (kg)	
OP 3620	**Galva steel**	270 L	11	Ø 490mm	Ø 1660	63.5	
OP 3613	Paint steel	500 L	11	Ø 600mm	Ø 2060	125	
OP 3621	**Galva steel**	500 L	11	Ø 600mm	Ø 2060	125	

500 L · 2 WARRANTY

TE

OP 3615
DRYER 900l

Air refrigerator dryer with aluminum-copper heat exchanger for perfect operating, with 'Energy Saving' technology.

Specifications:
- 16 bar
- dimensions: 250x660x460mm
- weight: 24kg

230V · 900 L · 2 WARRANTY

Energy saving

OP 3616
DRYER 1200l

Specifications:
- 16 bar
- dimensions: 250x660x460mm
- weight: 25kg

230V · 1200 L · 2 WARRANTY

OP 3617
DRYER 2500l

Specifications:
- 16 bar
- dimensions: 250x660x460mm
- weight: 29kg

230V · 2500 L · 2 WARRANTY

TN

OP 3619
1" CONNECTION HOSE

OP 3618
3/4" CONNECTION HOSE

2 WARRANTY

CHOOSE YOUR AIR PIPE AND FITTING KIT PROPERLY.

Key points to consider

- air pipe material?
- air pipe diameter to suit your needs?
- number of companions?
- number of downpipes wished?

Many tools use air to operate.

Air pressure that is too low considerably reduces the performance of most pneumatic tools, which are generally made to operate at a pressure of 6.3 bar: lower pressure reduces tool efficiency and decreases productivity.

The common issue is the need to have several air channels, which correspond to different tools and/or uses.

To consider:
Set up your main network as a "closed loop" in order to limit pressure drops.

EXPERT ADVICE

The choice of material has a significant influence on the flexibility, weight, performance and Durable of the air pipe.

If the pipe material is not adapted to the workplace conditions, the pipe will quickly break down or underperform.

DIFFERENT MATERIALS

PVC

\+ Economical

\- Tricky to set up
Weak: expansion, risk of leaking. Permanent set up (glued)

STEEL

\+ Durable
High mechanical resistance

\- Set up by a professionnal
Risk of leaking screw connection
Permanent set up

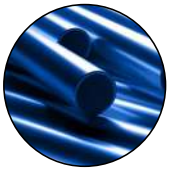

ALUMINUM

\+ Easy to install and use
Lightweight, adjustable size
High mechanical resistance, durable

This is the ultimate setup for workshops!

HOW TO CHOOSE

YOUR COMPRESSOR				NETWORK SIZE				CLAS SOLUTIONS			
Power		Air flow rate		Lenght & diameter				REF			
kW	CV	l/min	m3/h	50m	100m	150m	Nb of companions	KR 2016	KR 3020	KR 4425	KR 6032
2,2	3	250	15	Ø16	Ø16	Ø20	1	•			
4	5	450	27	Ø20	Ø20	Ø20	2 - 3		•		
5,5	7,5	600	36	Ø20	Ø20	Ø25	3 and +		•		
7,5	10	800	48	Ø20	Ø25	Ø25	3 and +			•	
11	15	1500	90	Ø25	Ø25	Ø32	3 and +			•	
15	20	2000	120	Ø25	Ø32	Ø32	3 and +			•	•

AIR PIPE AND FITTING KITS

TN

KR 2016

ALUMINUM AIR PIPE AND FITTING KIT Ø16mm L.20m 3 DOWNPIPES

Aluminum components for tubes, and technopolymer fittings make this system a safe, durable network, with no risk of corrosion or pipe deformation.
Economical, thanks to its quick assembly: no gluing, no welding or crimping, works by interlocking, locking.
High adaptability with these multiple connectors, and by its compatibility for existing network recovery.

The kit can be modulated at any time and allows an economic projection at any time (estimate not essential).
Mounting accessories: see website.

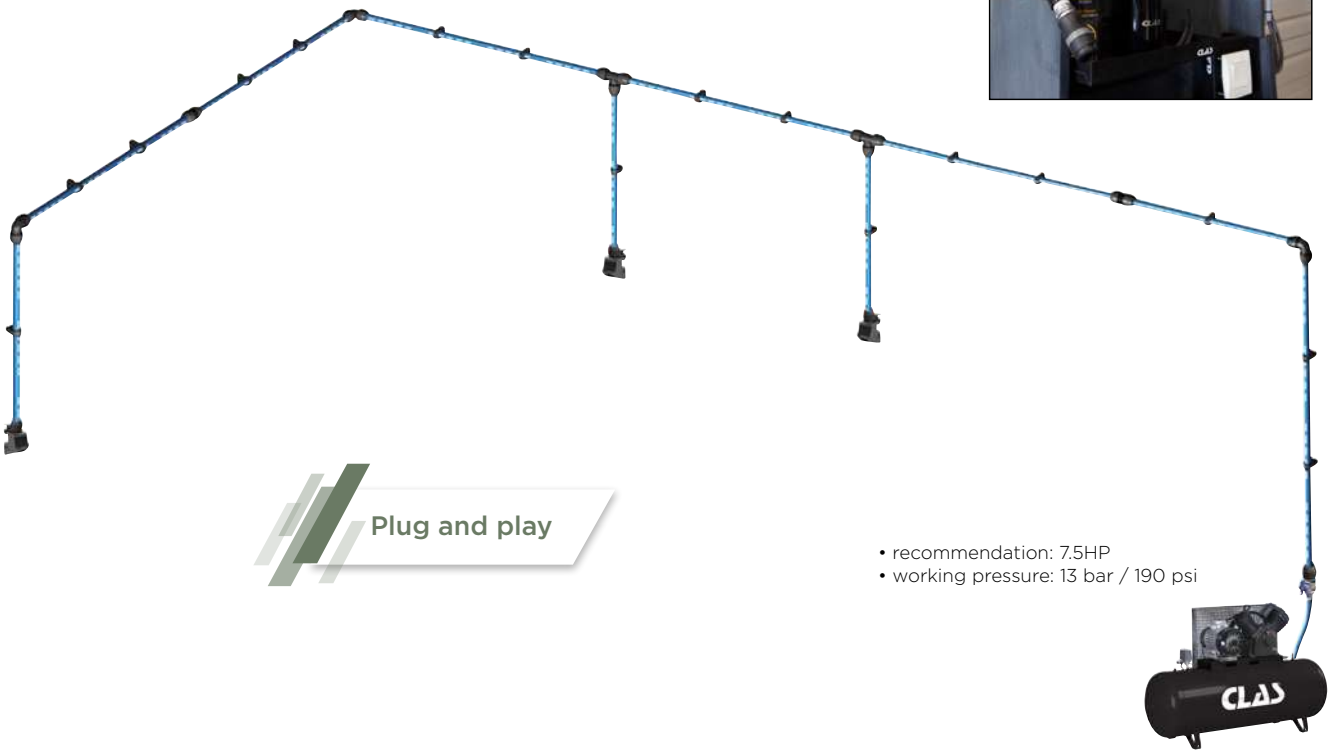

Plug and play

- recommendation: 7.5HP
- working pressure: 13 bar / 190 psi

COMPOSITION

	ALUMINUM PIPE Ø16mm LENGTH 4M	10
	COMPOSITE SLEEVE Ø16mm	5
	SET OF 10 CLAMP 16mm M8	2
	COMPOSITE ELBOW 90° FOR Ø16mm	3
	EQUAL COMPOSITE TEE Ø16mm	2

	COMPOSITE TAPERED MALE THREADED STRAIGHT FITTING Ø16xM1/2"G	3
	ALUMINUM FEMALE WALL BRACKET 1/2"x1/2"G	3
	THREAD CONNECTION FLEXIBLE 16x1/2"	2M
	MALE THREADED VALVE Ø16mm 1/2"G	1
	SPECIAL WRENCH NUT TIGHTENING Ø16 TO Ø20	1

TN

TO CONSIDER !

OP 0706

FAST CONNECTOR PASSAGE 6mm
MALE 1/2"

20 m 5 WARRANTY

TN

KR 3020

ALUMINUM AIR PIPE AND FITTING KIT Ø20mm L.30m 4 DOWNPIPES

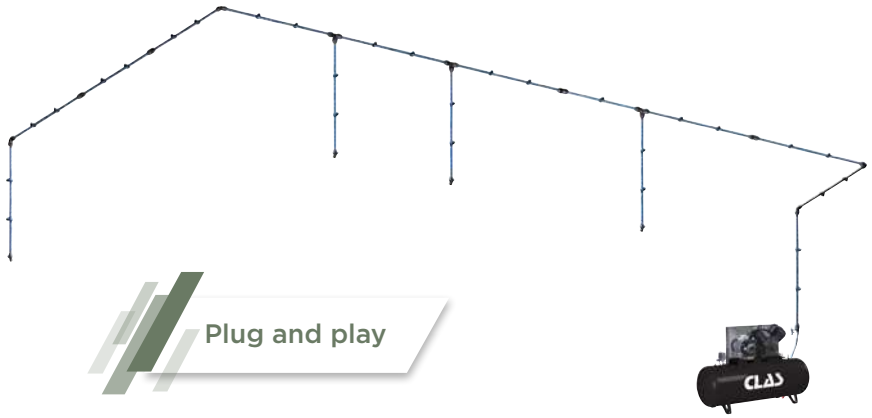

Aluminum components for tubes, and technopolymer fittings make this system a safe, durable network, with no risk of corrosion or pipe deformation.
Economical, thanks to its quick assembly: no gluing, no welding or crimping, works by interlocking, locking.
High adaptability with these multiple connectors, and by its compatibility for existing network recovery.

Recommended: 5HP or 7.5HP compressor

COMPOSITION

	ALUMINUM PIPE Ø20mm LENGTH 4M	15
	COMPOSITE SLEEVE Ø20mm	5
	10 CLAMP SET 20mm M8	3
	COMPOSITE ELBOW 90° FOR Ø20mm	4
	EQUAL COMPOSITE TEE Ø20mm	3

	COMPOSITE TAPERED MALE THREADED STRAIGHT FITTING Ø20xM1/2"G	4
	APPLIQUE À SORTIE TARAUDÉE	3
	THREADED CONNECTION HOSE 16x1/2"	2M
	VANNE POUR TUBE Ø25 TARAUDEE F 3/4"G	1
	CLE SPECIALE SERRAGE ECROU Ø16 A Ø20	1

30 m 5 WARRANTY

TN

KR 4425

ALUMINUM AIR PIPE AND FITTING KIT Ø25mm L.36m 5 DOWNPIPES

Aluminum components for tubes, and technopolymer fittings make this system a safe, durable network, with no risk of corrosion or pipe deformation.
Economical, thanks to its quick assembly: no gluing, no welding or crimping, works by interlocking, locking.
High adaptability with these multiple connectors, and by its compatibility for existing network recovery.

The kit can be modulated at any time and allows an economic projection at any time (estimate not essential).
Mounting accessories: see website.

Recommendation: 10HP and more compressor

COMPOSITION

	ALUMINUM PIPE Ø25mm LENGTH 4M	18
	ALUMINUM PIPE Ø20mm LENGTH 4M	5
	COMPOSITE SLEEVE Ø25mm	9
	10 CLAMP SET 25mm M8	4
	10 CLAMP SET 20mm M8	1
	COMPOSITE ELBOW 90° FOR Ø25mm	5
	COMPOSITE TEE REDUCED ON CENTER Ø25X20	5
	EQUAL COMPOSITE TEE Ø25mm	1

	CAP Ø25mm	1
	COMPOSITE TAPERED MALE THREADED STRAIGHT FITTING Ø25x1/2 "G	1
	ALUMINIUM FEMALE WALL BRACKET	5
	THREADED CONNECTION HOSE 3/4" M x3/4" F	2M
	THREADED VALVE FOR Ø25 F 3/4"G	1
	SPECIAL WRENCH NUT TIGHTENING Ø16 TO Ø20	1
	SPECIAL WRENCH NUT TIGHTENING Ø25 TO Ø32	1

36 m 5 WARRANTY

TN

KR 6032

ALUMINUM AIR PIPE AND FITTING KIT Ø32mm L.60m 8 DOWNPIPES

Aluminum components for tubes, and technopolymer fittings make this system a safe, durable network, with no risk of corrosion or pipe deformation.
Economical, thanks to its quick assembly: no gluing, no welding or crimping, works by interlocking, locking.
High adaptability with these multiple connectors, and by its compatibility for existing network recovery.

Plug and play

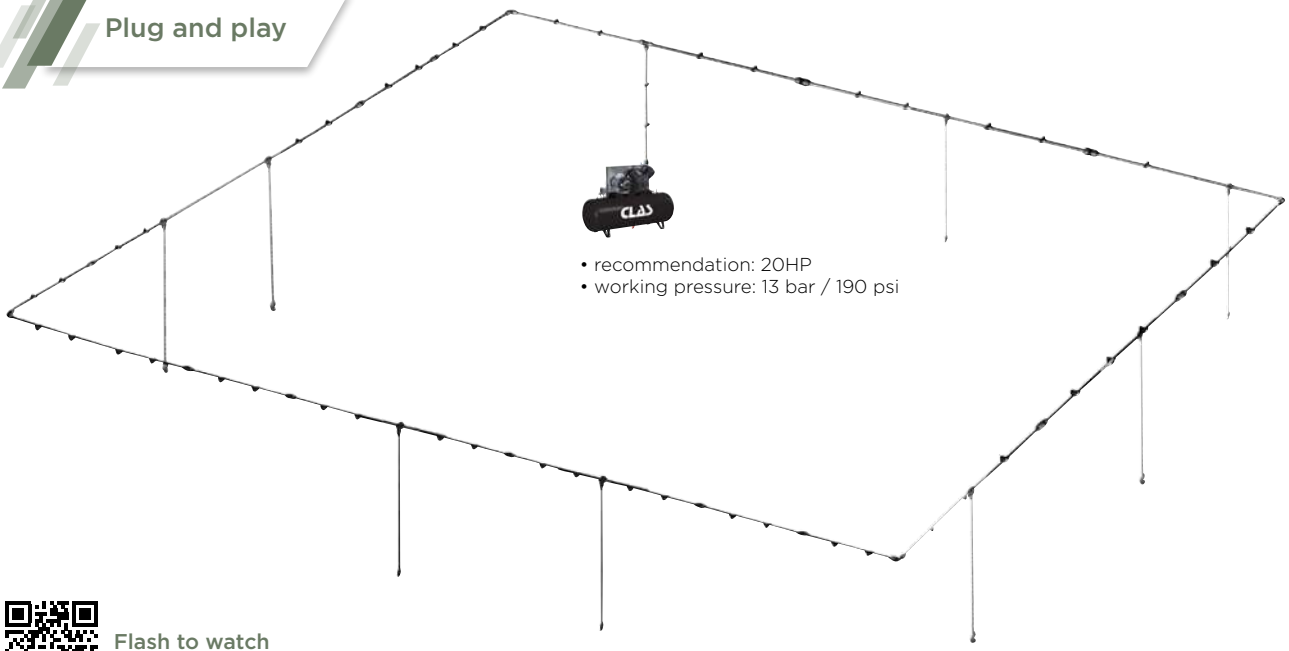

- recommendation: 20HP
- working pressure: 13 bar / 190 psi

Flash to watch the video!

NOTE

Pneumatic solutions p.104 and reels p.99

COMPOSITION

	ALUMINUM PIPE Ø32mm LENGTH 4m	30	KR 7038
	ALUMINUM PIPE Ø20mm LENGTH 4M	8	KR 7036
	COMPOSITE SLEEVE Ø32mm	15	KR 7017
	10 CLAMP SET 32mm M8	3	KR 7012
	10 CLAMP SET 20mm M8	2	KR 7010
	COMPOSITE ELBOW 90° FOR Ø32mm	6	KR 7007
	COMPOSITE TAPPING FLANGE FOR PIPE Ø32xØ20	8	KR 7046

	EQUAL COMPOSITE TEE Ø32mm	2	KR 7076
	CAP Ø32mm	1	KR 7025
	MULTICOUCH HOSE	2M	
	FLEXIBLE LINK Ø32mm	1	KR 7031
	VANNE RESEAU Ø32	1	KR 7058
	SPECIAL WRENCH NUT TIGHTENING Ø16 TO Ø20	1	KR 7054
	SPECIAL WRENCH NUT TIGHTENING Ø25 TO Ø32	1	KR 7055

TN

TO CONSIDER !

OP 0706

FAST CONNECTOR PASSAGE 6mm MALE 1/2"

60 m 5 WARRANTY

AIR PIPE AND FITTING PARTS

TN

ALUMINUM PIPE 4m

KR 7035	ALUMINUM PIPE Ø16mm LENGTH 4M
KR 7036	ALUMINUM PIPE Ø20mm LENGTH 4M
KR 7037	ALUMINUM PIPE Ø25mm LENGTH 4M
KR 7038	ALUMINUM PIPE Ø32mm LENGTH 4m
KR 7039	ALUMINUM PIPE Ø40mm LENGTH 4M

CLAMPS

KR 7009	SET OF 10 CLAMP 16mm M8
KR 7010	10 CLAMP SET 20mm M8
KR 7011	10 CLAMP SET 25mm M8
KR 7012	10 CLAMP SET 32mm M8
KR 7013	10 CLAMP SET 40mm M8

COMPOSITE SLEEVE

KR 7014	COMPOSITE SLEEVE Ø16mm
KR 7015	COMPOSITE SLEEVE Ø20mm
KR 7016	COMPOSITE SLEEVE Ø25mm
KR 7017	COMPOSITE SLEEVE Ø32mm
KR 7018	COMPOSITE SLEEVE Ø40mm

COMPOSITE ELBOW 90°

KR 7004	COMPOSITE ELBOW 90° FOR Ø16mm
KR 7005	COMPOSITE ELBOW 90° FOR Ø20mm
KR 7006	COMPOSITE ELBOW 90° FOR Ø25mm
KR 7007	COMPOSITE ELBOW 90° FOR Ø32mm
KR 7008	COMPOSITE ELBOW 90° FOR Ø40mm

COMPOSITE ELBOW 45°

KR 7000	COMPOSITE ELBOW 45° FOR Ø20mm
KR 7001	COMPOSITE ELBOW 45° FOR Ø25mm
KR 7002	COMPOSITE ELBOW 45° FOR Ø32mm
KR 7003	COMPOSITE ELBOW 45° FOR Ø40mm

COMPOSITE TAPPING FLANGE

KR 7043	COMPOSITE TAPPING FLANGE FOR PIPE Ø25xØ16
KR 7044	COMPOSITE TAPPING FLANGE FOR PIPE Ø25xØ20
KR 7045	COMPOSITE TAPPING FLANGE FOR PIPE Ø32xØ16
KR 7046	COMPOSITE TAPPING FLANGE FOR PIPE Ø32xØ20
KR 7047	COMPOSITE TAPPING FLANGE FOR PIPE Ø40xØ16
KR 7048	COMPOSITE TAPPING FLANGE FOR PIPE Ø40xØ20
KR 7049	COMPOSITE TAPPING FLANGE FOR PIPE Ø40xØ25

CAP

KR 7022	CAP Ø16mm
KR 7023	CAP Ø20mm
KR 7024	CAP Ø25mm
KR 7025	CAP Ø32mm
KR 7026	CAP Ø40mm

EQUAL COMPOSITE TEE

KR 7073	EQUAL COMPOSITE TEE Ø16mm
KR 7074	EQUAL COMPOSITE TEE Ø20mm
KR 7075	EQUAL COMPOSITE TEE Ø25mm
KR 7076	EQUAL COMPOSITE TEE Ø32mm
KR 7077	EQUAL COMPOSITE TEE Ø40mm

COMPOSITE TEE REDUCED ON CENTER

KR 7063	COMPOSITE TEE REDUCED ON CENTER Ø20X16
KR 7064	COMPOSITE TEE REDUCED ON CENTER Ø25X16
KR 7065	COMPOSITE TEE REDUCED ON CENTER Ø25X20
KR 7066	COMPOSITE TEE REDUCED ON CENTER Ø32X20
KR 7067	COMPOSITE TEE REDUCED ON CENTER Ø40X20
KR 7068	COMPOSITE TEE REDUCED ON CENTER Ø40X25

COMPOSITE TAPERED THREADED STRAIGHT FITTING

KR 7081	COMPOSITE TAPERED MALE THREADED STRAIGHT FITTING Ø16xM1/2"G
KR 7082	COMPOSITE TAPERED MALE THREADED STRAIGHT FITTING Ø20xM1/2"G
KR 7083	COMPOSITE TAPERED MALE THREADED STRAIGHT FITTING Ø20xM3/4"G
KR 7084	COMPOSITE TAPERED MALE THREADED STRAIGHT FITTING Ø25x1 "G
KR 7085	COMPOSITE TAPERED MALE THREADED STRAIGHT FITTING Ø25x1/2 "G
KR 7086	COMPOSITE TAPERED MALE THREADED STRAIGHT FITTING Ø25x3/4 "G
KR 7087	COMPOSITE TAPERED MALE THREADED STRAIGHT FITTING Ø32x1 "G
KR 7088	COMPOSITE TAPERED MALE THREADED STRAIGHT FITTING Ø32x1"1/4G
KR 7089	COMPOSITE TAPERED MALE THREADED STRAIGHT FITTING Ø40x1 "G
KR 7090	COMPOSITE TAPERED MALE THREADED STRAIGHT FITTING Ø40x1"1/2G
KR 7091	COMPOSITE TAPERED MALE THREADED STRAIGHT FITTING Ø40x1"1/4G

AND ALSO...

VALVES

THREADED WALL BRACKET

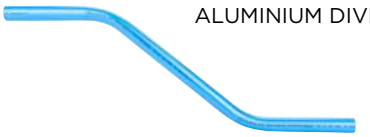

ALUMINIUM DIVERSION

CHAMFERING TOOL

SPECIAL WRENCH NUT TIGHTENING

... ALL ACCESSORIES ON CLAS.COM

5 WARRANTY

WORKBENCHES

NEW

TN

NEW RANGE WORKSHOP FURNITURE

MA 0031
PERFORMATED WALL PANEL
600x1090x30mm

MA 0005
CABINET 60x200cm
LEFT-HAND OPENING

MA 0007
CABINET
600x900x600mm

MA 0004
LOW CABINET MODULE
900x900x600cmm DUAL DOOR

Here is an example of combination.
Create the layout of your choice by mixing each element.

Full list available on **clas.com**

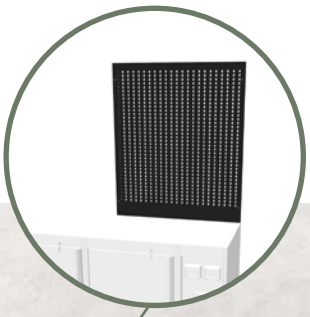

MA 0032
PERFORATED WALL PANEL
900x1090x30mm

NEW

MA 0026
CURTAIN CABINET
1500X1060x200mm

MA 0012
OPENED CABINET
600x900X600mm
1 DRAWER

MA 0007

MA 0017
LOW CABINET 300x900x600mm FOR
ELECTRIC PLUGS AND REELS

2 WARRANTY

TN

NEW RANGE WORKHOP FURNITURE

The dimensions of the elements: width, height, depth oversized increase the storage capacity of more than 15% compared to standard products on the market.
Example:
CLAS cabinet: W.600xH.900xD.600mm = 0,324m3
Standard cabinet: W.600xH.910xD.450mm = 0,245m3
The important depth of the work surface (600mm), facilitates the handling of voluminous parts (as a reminder, the standard market only 450mm)
In order to preserve the longevity of the furniture, we recommend the addition of an ABS tray.

NEW

Dual panel door
= strong, no warping

Grid panel
= offers a wide choice of tool position

100% drawer opening
= improved storage

ABS panel (option)
= design, easy to clean

Metal hinges
= solid, respects the door alignment

Specifications :
- European made cabinet
- 10 tenths steel sheet
- epoxy paint
- solid cabinet with high quality finish
- delivered with a locking key
- 4 easily adjustable feet to adjust the flatness

One-handed assembly, no lock nut, the cabinet can be positioned directly against the wall, no space needed to pass a wrench behind.

Quick and easy to assemble

Furniture with baseboards
= no throwing of tools under the furniture

WORKBENCHES

TN

EG 0311

1.5m WORKBENCH SET

Hight weight capacity 700kg

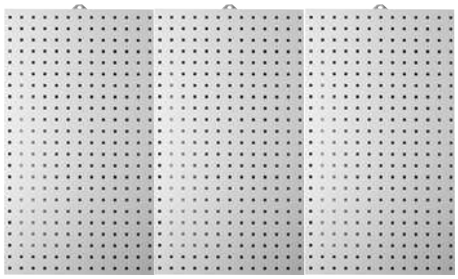

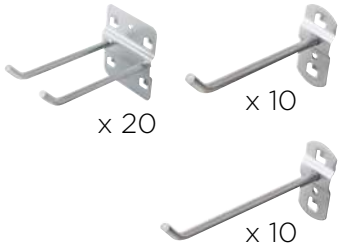

Dimensions:
- wooden trays: L.1500xl.750xH.30mm
- framework: L.1410xl.692xH.855mm
- storage (metal plate): L.1410xl.610mm
- weight: 95kg

EG0335 : 1 x metal workbench wooden tray 1.5m
EG0337 : 1 x drawer
EG0344 : 2 x bag of 10 double hooks ø6mm l.50mm
EG0346 : 1 x bag of 10 simple hooks ø6mm l.50mm
EG0347 : 1 x bag of 10 double hooks ø6mm l.100mm
EG0357 : 3 x perforated panel tool rack 500x900x30mm

Max. Kg 700

TN

EG 0312

2m WORKBENCH SET

Hight weight capacity 700kg

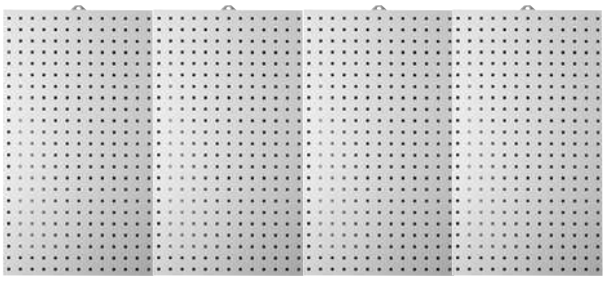

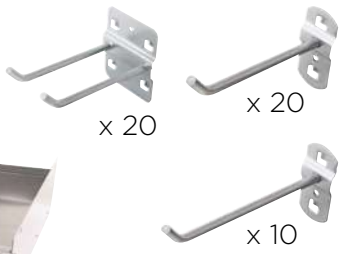

Dimensions:
- wooden trays: L.2000xl.740xH.30mm
- framework: L.1900xl.692xH.855mm
- storage (metal plate): L.1900xl.610mm
- weight: 120kg

EG0336 : 1 x metal workbench wooden tray 2m
EG0357 : 4 x perforated panel tool rack 500x900x30mm
EG0344 : 2 x bag of 10 double hooks ø6mm l.50mm
EG0346 : 2 x bag of 10 simple hooks ø6mm l.50mm
EG0347 : 1 x bag of 10 double hooks ø6mm l.100mm
EG0337 : 2 x drawer

Max. Kg 700

TN

EG 0335

METAL WORKBENCH WOODEN TRAY 1.5m

Dimensions:
- wooden trays: L.1500xl.750xH.30mm
- framework: L.1410xl.692xH.855mm
- storage (metal plate): L.1410xl.610mm
- weight: 95kg
- possibility to fit 1 drawer only EG0337 (not included)

Hight weight capacity 700kg

EG 0336

METAL WORKBENCH WOODEN TRAY 2m

Dimensions:
- wooden trays: L.2000xl.740xH.30mm
- framework: L.1900xl.692xH.855mm
- storage (metal plate): L.1900xl.610mm
- weight: 120kg
- possibility to fit 1 drawer only EG0337 (not included)

EG 0337	DRAWER	Accessory of EG 0335/EG 0336/EG 0311/EG 0312

Max. Kg 700 — 2 WARRANTY

TN

EG 0357

PERFORATED PANEL TOOL RACK
500x900x30mm

Accessory of EG 0335/EG 0336/EG 0311/EG 0312

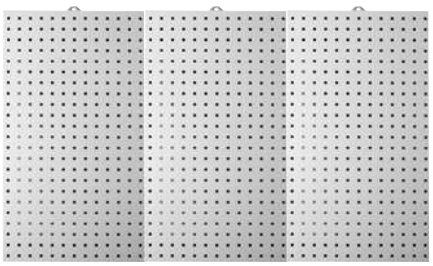

Modular to meet your needs, EG0357 panels have been designed to be assembled together.

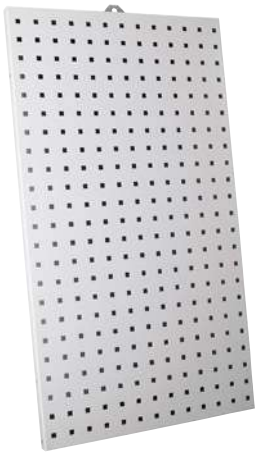

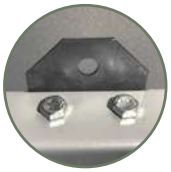

Perforation, square 10x10, clearance 38mm

2 WARRANTY

TN

EG 0344

BAG OF 10 DOUBLE HOOKS
Ø6mm L.50mm

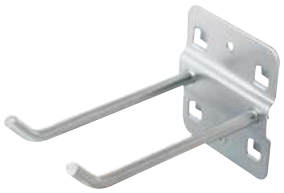

EG 0346

BAG OF 10 SIMPLE HOOKS
Ø6mm L.50mm

EG 0347

BAG OF 10 DOUBLE HOOKS
Ø6mm L.100mm

Ø hook: 6mm
Hook length: 50mm
Tip 45°
Squared perforated panel fixing
10x10mm (38mm gap)

NO WARRANTY

TN

OC 0711

BODYWORK 3 TRAY STORAGE TROLLEY

Allows parts which have been uninstalled to be put away and stored such as headlights, headrests, instrument panels, bumpers...

Specifications:
- 3 trays (2 wooden and 1 mesh)
- platform height: 260-810-1390mm
- mesh base
- 4 swiveling wheels, 2 of which have brakes
- dimensions: L.630xW.1110xH.1625mm

Max. Kg 100 | 2 WARRANTY

TN

EG 0083

3 TRAY ROLLER CABINET

Specifications:
- overall dimensions: 766x415x840mm
- tray dimensions: 760x410x60mm
- 2 fixed casters Ø100mm
- 2 swiveling casters Ø100mm with brakes
- 2.5mm thick EVA foam tray protection
- admissible load per shelf: 90kg
- total admissible load: 270kg

Max. Kg 270 | 2 WARRANTY

TN

EG 0225

900W INDUSTRIAL BENCH GRINDER Ø200x32x32mm WHEEL+BRUSH

Specifications:
- adjustable protective screen with magnifying lens
- dual extractor vent
- speed: 2950 rpm

Fixing:
- 250mm wide centre distance
- 155mm deep centre distance

Supplied with:
- brush Ø200mm
- grinding wheel grit 60

NOTE

Workshop device see p.121

220V | 900 W | 2 WARRANTY

TN

Releasable jaw system allowing you to make adjustments to the jaw immediately.

Mors disponible au détail

OM 4066

PARALLEL JAW CLAMPS 150mm QUICK TUBE HOSE APPROACH

Specifications:
- jaw width: 150mm
- jaw height: 20mm
- opening: 180mm
- interchangeable steel jaws
- supplied with revolving base with 3 anchoring points

OM 4068

PARALLEL JAW CLAMPS 205mm QUICK TUBE HOSE APPROACH

Specifications:
- jaw width: 205mm
- jaw height: 22mm
- interchangeable steel jaws
- tube, anvil and horn jaws
- jaw opening: 260mm
- supplied with revolving base with 3 anchoring points (180x225mm)

5 WARRANTY

CHOOSE YOUR GAS EXTRACTOR PROPERLY.

Key points to consider.

• vehicle type : LV, LCV, very low vehicle?
• space and set up required in the workshop?

There are many types of extractors:

• **mobile** (pneumatic or electric):
the device moves towards the vehicle to proceed to the extraction
• **stationary** (suction unit or reel):
the car gets as close as possible to the device

To consider:

You should know that French health insurance recommends suction rates adapted to each vehicle (order of December 9, 2020):
• higher than 400m3/h for cars
• higher than 1000m3/h for trucks

The French government provides financial support, so check if you are eligible.

THE DIFFERENT EXTRACTORS

PNEUMATICS

+ Lightweight, easy to move

- Air supply, limited capacities

ELECTRICAL MOBILE

+ Mobile, universal, no requirement for of exhaust height

- Space requirement in the workshop

STATIONARY ELECTRICS

+ Standardized, reduced space requirements
No restrictions related to the height of the exhaust

- Dedicated set up location

Specific needs, please contact us.
Various available accessories.

Many available options, to be adjusted to any workshop layout: HGV or light vehicles, stationary or mobile installation...

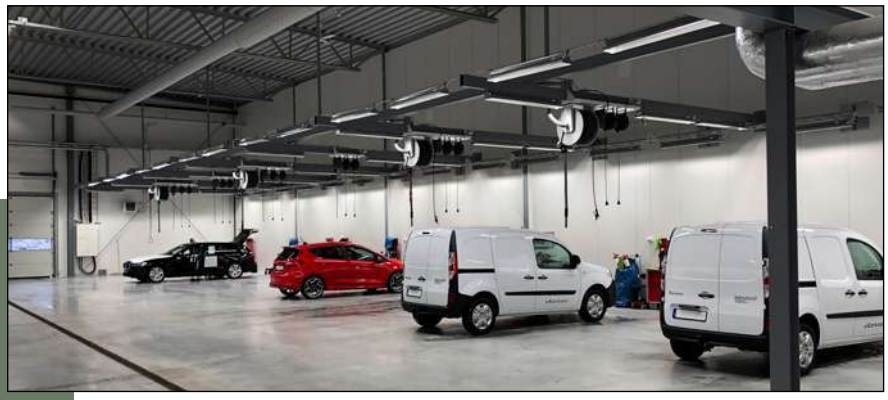

OUR RANGE OF EXTRACTORS

	REF	Power supply	Engine power	Hose length	Ø hose	Temperature	Flow rate m3/h	dB
MOBILES	**EG 0405**	Pneumatic		5m	75mm	200°C		
	EG 0409	Pneumatic		6m	120mm	200°C	790	
	AG 0023	230V	0.5 CV	2 x 1.25m	75mm	200°C	2 x 250	66
	AG 0025	230V	1.5 CV	1m	150mm	200°C	1200	72
	AG 0026	400V	1.5 CV	1m	150mm	200°C	1200	72
FIXED	**AG 0019**	230V	0.5 CV	5m	100mm	200°C	450	66
	AG 0021	230V	1 CV	2 x 5m	100mm	200°C	2 x 450	66
	AG 0007	230V	0.5 CV	10m	100mm	200°C	450	66
	AG 0008	400V	0.5 CV	10m	100mm	200°C	450	66
	AG 0015	400V	1CV	10m	150mm	200°C	1000	68
DFP	**AG 0057**	230V	1.5 CV	5m	150mm	500°C	1200	72
	AG 0059	400V	1.5 CV	5m	150mm	500°C	1200	72
RAIL	**AG 0042**	400V	1 CV	8m	100mm	200°C	450	68
	AG 0043	400V	1 CV	12m	100mm	200°C	450	68
	AG 0044	400V	1 CV	16m	100mm	200°C	450	68
	AG 0045	400V	1 CV	8m	100mm	200°C	2 x 450	68
	AG 0046	400V	1 CV	12m	100mm	200°C	2 x 450	68
	AG 0047	400V	1 CV	16m	100mm	200°C	2 x 450	68

PNEUMATIC EXHAUST GAS EXTRACTION

TN

EG 0405

EXHAUST GAS EXTRACTOR

Pneumatic exhaust gas extractor that requires 5 to 8bar Ø10mm compressed air supply.

Small footprint

- adjustable height min. 15cm max. 55cm
- inlet Ø130mm
- evacuation hose length 5m Ø75mm, 200°C
- compressed air supply Ø10mm

5 m 2 WARRANTY

TN

EG 0406

DUAL EXHAUST SYSTEM GAS EXTRACTOR

Accessory of EG 0405

Up to 200°C
Outlet: Ø90mm
Inlet: Ø52mm

3 m 2 WARRANTY

TN

EG 0409

COMPRESSED AIR POWERED EXHAUST GAS EXTRACTOR

Connect the extractor to a filtered non lubricated compressed air line

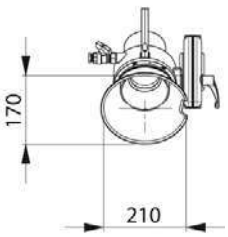

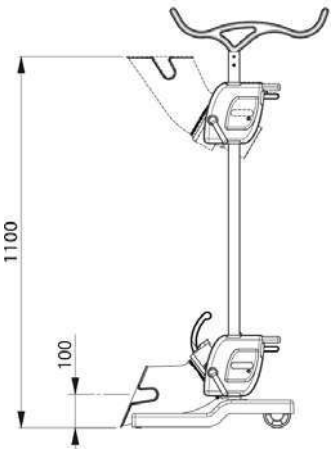

Specifications:
- extractor: 790m3/h
- 6m rubber discharge hose 200°C Ø120mm
- supply pressure 6bar
- minimum supply line Ø10mm

6 m 2 WARRANTY

ELECTRICAL EXHAUST GAS EXTRACTION

TE

AG 0019

SINGLE EXTRACTOR GROUP
5m Ø100mm

NEW

This extractor is the easiest installation kit to install on a wall or facade, it can also be used for specific operations such as for specific operations such as DPF regeneration or opacimetry tests.
The equipment allows to work in a healthy environment without inhalation of exhaust gases and in compliance with the safety standards at work.

Easy to install

Specifications:
- galvanized steel structure
- epoxy paint
- 5m of pipe Ø100mm (-40° to +200°) in fabric vulcanized in EPDM at high temperature on both sides
- delivery: Ø 12mm
- power supply: 230V Mono
- motor power: 0,5cv, 0.35KW, 50HZ, 1.0A
- max flow: 450m3/h
- noise level: 66dB
- thermal protection switch
- exhaust nozzle equipped with an anti-intrusion grid, a manual clamp, a gas suction shutter and an access for the opacimeter probe

Many options available, please consult us.

400V VERSION AVAILABLE ON CLAS.COM

66 dB | 5 m | 230V | 2 WARRANTY

NEW

AG 0027	Y-DEVIATION ADAPTER 2x5m Ø75mm
AG 0029	OVAL FUNNEL Ø100mm
AG 0032	FUNNEL Ø100mm
AG 0033	FUNNEL Ø125mm
AG 0034	FUNNEL Ø75mm

TOP PRODUIT

TE

AG 0021

DOUBLE EXTRACTOR GROUP
2x5m Ø100mm

NEW

Easy to install

Specifications:
- galvanized steel structure
- electric motor, statically and dynamically balanced wheel, delivered with wall bracket and rubber funnel.
- 2x5m of hose Ø100mm (-40° to +200°) in high temperature EPDM vulcanized fabric on both sides. Completely anti-crushing structure, smooth inside and maintains flexibility over time thanks to the strong nylon spiral with a very tight pitch. This feature prevents the hose from stretching during pulling and from crushing in high stress situations.
- delivery: Ø 125mm
- power supply: 230V Mono
- motor power: 1hp, 0,75KW, 50HZ, 2,9A
- max flow: 450m3/h
- noise level: 66dB
- thermal protection switch
- rubber exhaust nozzle with watertight valve included in the body of the product, anti-intrusion network, clamp for fixing to the exhaust

Many options available, please consult us.

400V VERSION AVAILABLE ON CLAS.COM

66 dB | 230V | 2 WARRANTY

TE

AG 0023

MOBILE VACUUM CLEANER 2x1.25m Ø75mm 230V

Perfect for moving to different work areas for the LV workshops.

NEW

Mobility

Specifications:
- galvanized steel structure
- platform mounted on 4 swivel wheels
- epoxy paint (grey RAL 7040)
- 2x1,25m of pipes Ø75mm (-40° to +200°) in EPDM vulcanized fabric at high temperature on both sides
- delivery: Ø 125mm length 10m
- power supply: 230V Mono
- motor power: 0,5cv, 0.37KW, 50HZ, 1.7A
- max flow: 2X250m3/h
- noise level: 66dB
- on/off switch
- exhaust tips equipped with an anti-intrusion grid, manual clamps, gas suction shutters and access for the opacimeter probe

Many options available, please consult us.

66 dB | 230V | 2 WARRANTY

Trolley extractor mounted on 4 swivel wheels, adjustable in height and equipped with an articulated arm allowing the placement of the exhaust nozzle on the vehicle without the pipe touching the ground.
The equipment allows to work in a healthy environment without inhalation of exhaust gases and in compliance with the safety standards at work.

AG 0025

MOBILE VACUUM Ø150mm 230V

AG 0026

MOBILE VACUUM Ø150mm TRIPHASE 400V

Adjustable support

72 dB | 400V | 2 WARRANTY

SA 3219	METER CRUSH-PROOF 200°C EXHAUST PIPE Ø150mm	Spare part of EG 0424/EG 0428 -Accessory of SA 3232
SA 3232	EXHAUST END Ø150mm	Accessory of SA 3219/EG 0424

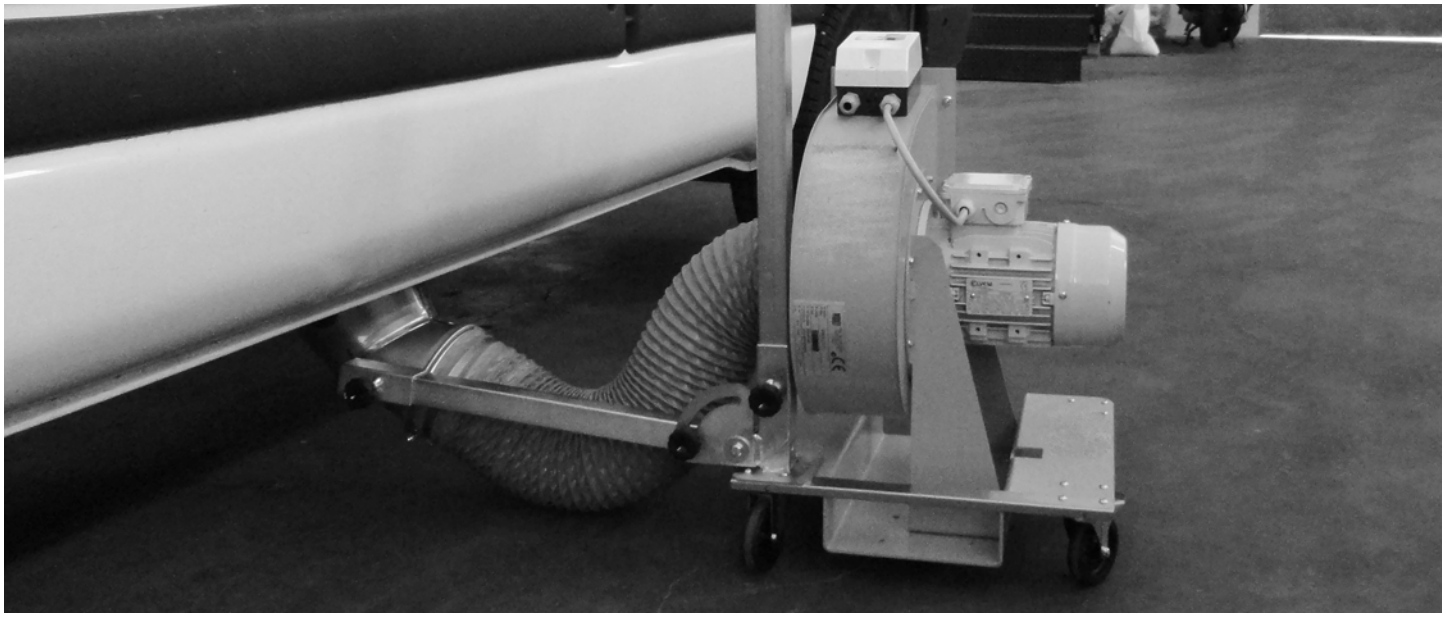

This mechanical spring reel complete with exhaust blower can be installed on the ceiling or wall, always maintaining the same performance. The equipment allows you to work in a healthy environment without inhalation of exhaust gases and in compliance with work safety standards.
Hose: anti-crushing structure, maintains flexibility over time thanks to the robust nylon spiral with a very tight pitch. This feature prevents the hose from stretching during pulling and from collapsing in high stress situations. Its smooth design on the inside guarantees maximum suction efficiency in m3.
Directly coupled electric motor, statically and dynamically balanced impeller to limit friction, vibration and reduce energy consumption. Inlet and outlet flanges are sized for optimum suction capacity. Support feet for wall or ceiling mounting are included.

NEW

VL

AG 0007

GAS EXTRACTOR REEL 10m Ø100mm 230V

AG 0008

GAS EXTRACTOR REEL 10m LV
Ø100mm 400V

Specifications:
- galvanized steel structure
- epoxy paint (grey RAL 7040)
- 10m of pipe Ø100mm (-40° to +200°) in high temperature EPDM vulcanized fabric on both sides
- delivery: Ø 125mm
- power supply: 230V Mono
- motor power: 0.5cv, 0.35KW, 50HZ, 1.7A
- max flow: 450m3/h
- noise level: 66dB
- thermal protection switch
- reel equipped with a pawl, an end stop with anti-skid system
- exhaust nozzle equipped with an anti-intrusion grid, a vice grip, a gas suction shutter and an access for the opacimeter probe
- weight: 43kg

Many options available, please consult us.

ADVANTAGE
Connection of the hose to the reel by an ABS gooseneck, guarantees no deformation, no loss of suction efficiency.

HGV

AG 0015

GAS EXTRACTOR REEL HGV
10m Ø150mm 400V

Specifications:
- galvanized steel structure
- epoxy paint (grey RAL 7040)
- 10m of pipe Ø150mm (-40° to +200°) in fabric vulcanized in EPDM at high temperature on both sides
- delivery: Ø 160mm
- power supply: 400 Tri
- motor power: 1,0cv, 0.75KW, 50HZ, 1.7A
- max flow: 1000m3/h
- noise level: 68dB
- thermal protection switch
- reel equipped with a pawl, an end stop with anti-skid system
- exhaust nozzle equipped with an anti-intrusion grid, a vice grip, a gas suction shutter and an access for the opacimeter probe
- weight: 73kg

NEW

Many options available, please consult us.

68 dB | 10 m | 400V | 2 WARRANTY

The rail is produced with a modular aluminum extruded profile equipped with a double rubber lip for easy installation and extraordinary wear resistance.
The rail is equipped with two sliding tracks outside the suction chamber to maintain the sliding elements over time.
The lightness combined with the rigid structure of the profile facilitates installation and guarantees optimal results for an easy extraction of the exhaust gases.
The equipment allows to work in a healthy environment without inhalation of exhaust gases and in compliance with the safety standards at work.

RAIL KIT

AG 0042	RAIL KIT 1 TROLLEY 8m
AG 0043	RAIL KIT 1 TROLLEY 12m
AG 0044	RAIL KIT 1 TROLLEY 16m
AG 0045	RAIL KIT 2 TROLLEYS 8m
AG 0046	RAIL KIT 2 TROLLEYS 12m
AG 0047	RAIL KIT 2 TROLLEYS 16m

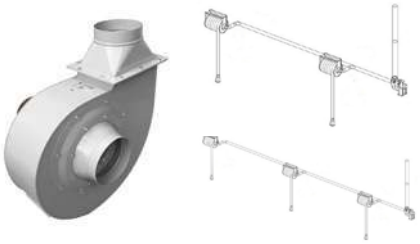

VACUUM CLEANER

AG 0052	VACUUM CLEANER LV FOR 2 REELS
AG 0053	VACUUM CLEANER LV FOR 3 REELS
AG 0054	HGV VACUUM CLEANER FOR 2 REELS
AG 0055	HGV VACUUM CLEANER FOR 3 REELS

Electric motor with statically and dynamically balanced impeller, inlet and outlet flanges sized according to the suction capacity.

CEILING MOUNTING BRACKET KIT

AG 0068	CEILING MOUNTING BRACKET KIT FOR 8m RAIL
AG 0069	CEILING MOUNTING BRACKET KIT FOR 12m RAIL
AG 0070	CEILING MOUNTING BRACKET KIT FOR 16m RAIL

3m

Delivery duct (to the outside of the building) horizontal.

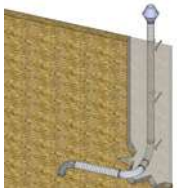

7m

Delivery duct (to the outside of the building) vertical.

BACKFLOW

AG 0064	BACKFLOW 3m Ø125mm
AG 0065	BACKFLOW 7m Ø125mm
AG 0066	BACKFLOW 3m Ø160mm
AG 0067	BACKFLOW 7m Ø160mm

TE

AG 0057

LV DPF REGENERATION EXTRACTOR GROUP

High temperature

Specific kit for the LV DPF regeneration.

Specifications:
- galvanized steel structure
- epoxy paint (grey RAL 7040)
- length of pipe: 5m resistant 500° Ø 150mm
- delivery: Ø 160mm
- power supply: 230V Mono
- motor power: 1,5cv, 1,1KW, 50HZ, 4,2A
- max flow: 1200m3/h
- noise level: 72dB
- thermal protection switch

Many options available, please consult us.

72 dB | 5 m | 230V | 2 WARRANTY

AG 0059

LV DPF REGENERATION EXTRACTOR GROUP WITH DUAL FUNNEL

72 dB | 5 m | 400V | 2 WARRANTY

SPILL CONTAINMENT

Dangerous waste in the workshop

The law requires all workshops to collect and separate their dangerous/ polluting waste.
There are different types in mechanical workshops:
- cooling and brake fluids
- used oil change
- oil and fuel filters
- soiled materials and packaging (e.g. rags, cans)
- aerosols
- batteries
- paints
- glues and sealants

It is necessary to have adapted trays.

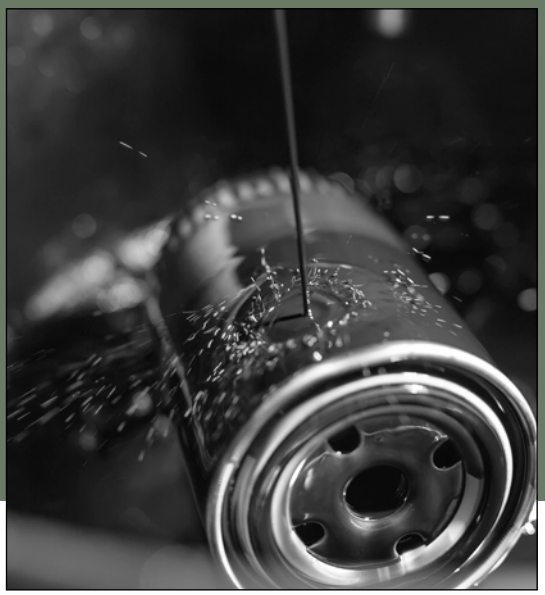

Our systems can go up to the platform

The platforms can connect to each other to create a wide storage area.

The addition of a ramp will provide easy access.

DIFFERENTS TYPES DE TRAYS

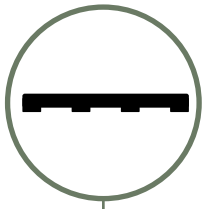

Platform: set on the ground, low profile for space saving

Spill plate to be used on workbench.

From the smallest size to the pallet size.

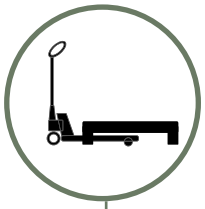

Spill containment tray: location for forks, for carrying with a forklift

The waterproof spill tray ensures no leakage and no pollution of the ground and/ or water.

Pallet spill containment tray: the pallet (1200x800) is directly placed on the tray

Pallet spill containment tray, to save time and handling.

STORAGE SPILL CONTAINMENT

*SCAN TO SEE OUR ENTIRE RANGE OF **STORAGE SPILL CONTAINMENT***

TRAYS	REF	Capacity (L)	Storage capacity (Kg)	Lenght (mm)	Width (mm)	Height (mm)	Tray weight	Drum(s)/ Cubitainer(s)	Handling
caillebotis amovible	HU 0210	**10**	50	400	300	155	2 kg	-	
	HU 0220	**20**	50	600	405	155	3 kg	-	
	HU 0230	**30**	50	800	400	155	4.5 kg	-	
	HU 0235	**60**	200	1000	600	175	9 kg	-	
	HU 0265	**100**	200	1200	800	175	14 kg	-	
	HU 0120	**110**	1.350	1600	800	150	24.5 kg		
	HU 0240	**230**	2700	1600	1600	150	45 kg		
	HU 0251	**250**	650	1310	910	380	16 kg		
	HU 0250	**250**	650	1300	750	440	20.5 kg		
	HU 0450	**480**	1250	1380	1290	480	41 kg		
	HU 0255	**1100**	2000	1380	1290	480	95 kg	ou	
	HU 0260	**1100**	3000	2450	1450	575	199 kg		

TN

HU 0121

PLATFORM RAMP

For easy loading

2 WARRANTY

TN

HU 0440

DRUM SUPPORT 220l

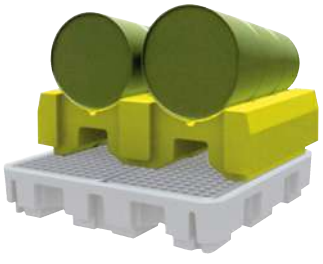

220 L | Max. T 1 | 2 WARRANTY

TN

HU 2016

FUNNEL FOR DRUMS 200L

NO WARRANTY

TN

OH 0009

DRUM GRIP 350kg

Max. Kg 350 | 2 WARRANTY

TN

HU 0290

2 SPILL STORAGE SET WITH DRUM 250l

Safe storage of dangerous products.

- dimensions: L.995xW.1565xH.2100mm
- storage of chemical products and hazardous waste
- opening on 2 sides

250 L | Max. Kg 650 | 2 WARRANTY

MORE

Extract from article 10 of the decree of February 2, 1998 (France):

I. Any liquid that could pollute the groundwater or soil must be stored within a bund wall with a retention capacity of at least the larger of the following two volumes:
- 100% of the capacity of the largest storage tank,
- 50% of the total capacity of all the storage tanks combined,

(...)
For the storage of containers with a unit capacity equal to or less than 250 liters, the retention capacity must be at least:
- In the case of fl ammable liquids, with the exception of lubricants, 50% of the total capacity of the barrels,
- In other cases, 20% of the total capacity of the barrels, (...)

II. The bund wall must be leak-proof for the substances it may have to contain and resistant to physical and chemical attack by these substances.
This must also be the case for its shut-oi device, which must be kept closed.
It must be possible to test the leak proofi ng of the associated tank(s) at any time (...)

Tanks or recipients containing i

SOURCE: Ministry of Ecology, Energy, Sustainable Development and the Sea (AIDA, INERIS)

CHOOSE YOUR HEATER PROPERLY.

Key points to consider

• area to heat up?
• fuel type?
• combustion type?

It's not enough to simply think you need to heat a room to find the right product.

Is the room you want open like the fast service bays?
Or is it a closed room that is open to the public?
Is it a small room or an 800sqm workshop?

To consider:
All our heaters work with a 230V/400V power supply even if the fuel type is different.

THE DIFFERENT FUELS

FUEL HEATING

+ Powerful, suitable for large volumes, rapid temperature rise
- Space requirement, odors, civil engineering

GAZ HEATING

+ No chimney or civil engineering, ideal open or well ventilated places
- Limited mobility

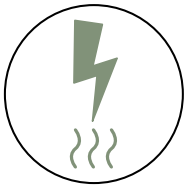

ELECTRIC HEATING

+ Easy to use, autonomous, light and compact, no combustion emissions
- Limited power, power consumption

THE COMBUSTION

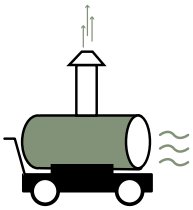

Indirect combustion

• with exhaust chimney
• especially suitable for rooms with poor ventilation or where people are likely to be present
• separates the burnt gases from the hot air flow: ability to bring the heat flow to the requested area.
• direct or indirect blowing (with optional ducting)

Direct combustion

• with exhaust chimney
• recommended for well ventilated open spaces such as car workshops.
• No separation of burnt gases and hot air flows: no ducting possible
• direct blowing

WHICH POWER FOR MY AREA TO HEAT?

V ____ x △T ____ x K ____ = ____ **kcal/h**

1 - Determine the volume of the room: **V** in m3 (Height x Length x Width)
2 - Determine the difference between the desired temperature and the minimum outdoor temperature: T in °C (ex.: desired temperature 15°C, minimum outdoor temperature -10°C, Temperature difference = 25°C)
3 - What is the insulation quality of the building? **K**

You must take into consideration the insulation quality of the building
K = 1,2 = very well insulated building (walls + insulated roof)
K = 2,4 = medium insulated building (insulated roof)
K = 3,5 = poorly insulated building uninsulated walls + roof)
K = 4 = non-insulated building (walls + corrugated roof)

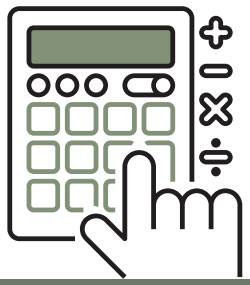

Scan to see our online tool

Heating capacity (V)	from 1 720 to 15 480 Kcal/h	from 17 200 to 69 316 Kcal/h	34 400 Kcal/h	from 14 280 to 43 000 Kcal/h	from 51 600 to 90 300 Kcal/h	from 10 320 to 25 800 Kcal/h	from 20 000 to 82 850 Kcal/h
FUEL	ELEC	FUEL	FUEL	FUEL	FUEL	BUTANE PROPANE	BUTANE PROPANE
Combustion	**-**	**indirect**	**radiant**	**direct**	**direct**	**direct**	**direct**
Evacuation	no	yes		no	no	no	no
KW	2 to 18 kW	20 to 80 kW	140 kW	16,5 to 50 kW	60 to 105 kW	12 to 30 kW	23 to 97,5 kW
Tank capacity	-	35 à 120 L	55L	20 à 35 L	70 à 120 L	-	-
Area to heat	20 to 90m²	200 to 800m²	100 to 400m²	165 to 500m²	600 to 1050m²	50 to 150m²	230 to 800m²
Highlight	**Easy to use**	**Ductable**	**Fast temperature rise**	**No chimney, no civil works**	**Large volume**	**Low space requirement**	**No chimney, no civil works**

ELECTRICAL HEATERS

TE

ELECTRICAL HEATER

Ideal for heating small offices, shops or waiting rooms. Not suitable for heating the workshop.

Metal structure painted with epoxy powders
Two heating levels
Possibility to use the fan only
Ambient thermostat for temperature setting
Safety thermostat for machine protection
Armoured element Inox
Motor with thermal protection
Cable and plug included on all models

REF	DESIGNATION	kW	Tension	Heating capacity (Kcal/h)	Air flow rate	Power consumption
CH 0001	**ELECTRICAL HEATER 3kw**	**2-3**	**230V/50Hz**	**1.720 2.580**	**300m³/h**	**13 Amp.**
CH 0002	ELECTRICAL HEATER 9kw	6-9	400V/50Hz	5.160 7.740	650m³/h	13 Amp.
CH 0003	ELECTRICAL HEATER 15kw	9-15	400V/50Hz	8.600 12.900	950m³/h	22,5 Amp.
CH 0004	**ELECTRICAL HEATER 18kw**	**9-18**	**400V/50Hz**	**10.320 15.480**	**1500m³/h**	**22,5 Amp.**

2 WARRANTY

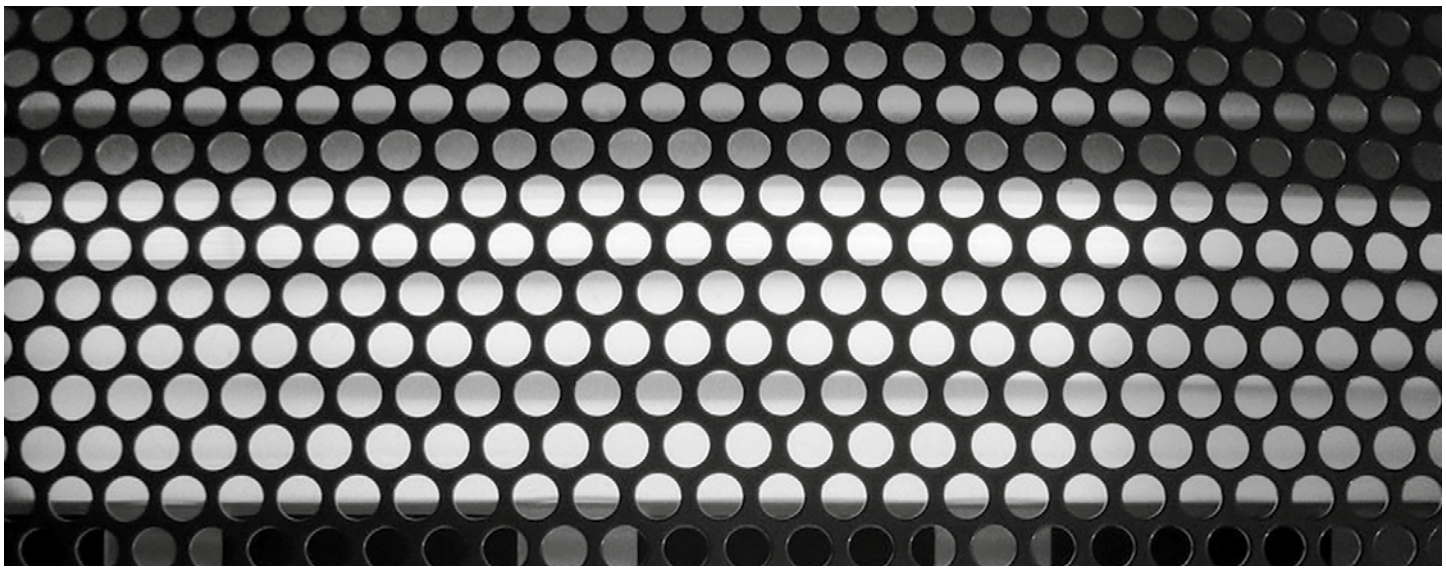

FUEL HEATERS

TE

CH 0033

FUEL INFARED HEATER 42kw

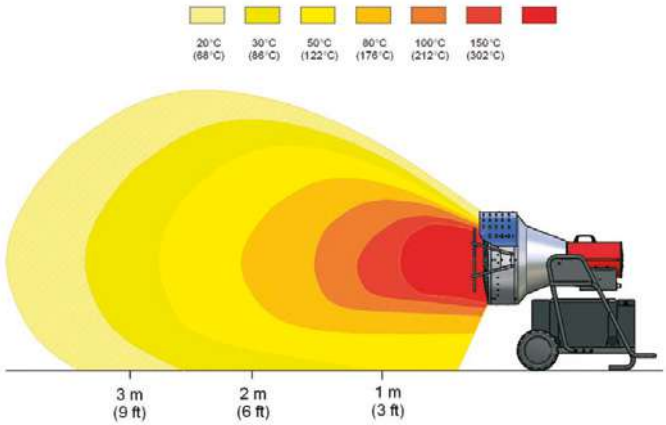

Metal and tubular structure painted with epoxy powders
Direct heat flow without air moving
Ceramic-fibre combustion chamber
Electronic flame check with photo-resistance
Post-ventilation device for combustion chamber cooling
Possibility to use an ambience thermostat
Thermoplastic tank
Vertically adjustable dish

Fuel pressure 2 bar/psi

CAPACITY	kW	Tension	Heating capacity	Power consumption	Fuel consumption
55 L	42	230V/50Hz	36.173 Kcal/h	100W	3.53 kg/h

55 L · 230V · 100 W · 2 WARRANTY

TE

INDIRECT DIESEL OIL HEATER

Metal structure painted with epoxy powders
Stainless steel fully proof combustion chamber
Electronic flame check with photo-resistance and equipment
Safety thermostat for excess temperature
Post-ventilation device for combustion chamber cooling
Efficiency up to 90%
Pre-set for ambient thermostat
Suitable for max. 12 meters ducting with standard conveyor and spiral pipe kit
Suitable for closed environments
Combustion head with clean air suctioning from outside and separated ventilation (only for mod. Antares 100)

REF	DESIGNATION	CAPACITY	kW	Tension	Heating capacity (Kcal/h)	Air flow rate	Power consumption	Fuel consumption (kg/h)
CH 0027	INDIRECT DIESEL OIL HEATER 20kw	35 L	20	230V/50Hz	17.200	1250m³/h	200W	1.69
CH 0028	INDIRECT DIESEL OIL HEATER 25kw	35 L	25	230V/50Hz	21.500	1250m³/h	200W	2.14
CH 0029	INDIRECT DIESEL OIL HEATER 32kw	70 L	32	230V/50Hz	27.520	1900m³/h	300W	2.5
CH 0030	INDIRECT DIESEL OIL HEATER 48.5kw	70 L	48,5	230V/50Hz	41.280	1900m³/h	300W	4.0
CH 0031	INDIRECT DIESEL OIL EATER 71.3kw	120 L	71,3	230V/50Hz	61.318	3500m³/h	750W	6.0
CH 0032	INDIRECT DIESEL OIL HEATER 80.6kw	120 L	80,6	230V/50Hz	69.316	3900m³/h	750W	6.8

230V · 2 WARRANTY

TE

DIRECT DIESEL OIL HEATER

Metal structure painted with epoxy powders
Stainless steel fire box
Electronic flame check with photo-resistance
Post-ventilation device for combustion chamber cooling
Safety thermostat for excess temperature
Model 15 portable
Models 20-30-40-50 trolley-mounted
Suitable for open or semi-open environments
Pre-set for ambient thermostat
Diesel oil gear pump

DIRECT DIESEL OIL HEATER 20kw

DIRECT DIESEL OIL HEATER 16.5kw

DIRECT DIESEL OIL HEATER 30kw

DIRECT DIESEL OIL HEATER 80kw

DIRECT DIESEL OIL HEATER 105kw HANGING

REF	DESIGNATION	CAPACITY	kW	Tension	Heating capacity (Kcal/h)	Air flow rate	Power consumption	Fuel consumption (kg/h)
CH 0022	DIRECT DIESEL OIL HEATER 16.5kw	20 L	16,5	230V/50Hz	14.280	500m³/h	150W	1.40
CH 0023	**DIRECT DIESEL OIL HEATER 20kw**	**20 L**	**20**	**230V/50Hz**	**17.200**	**500m³/h**	**150W**	**1.65**
CH 0024	DIRECT DIESEL OIL HEATER 30kw	35 L	30	230V/50Hz	25.800	1750m³/h	150W	2.53
CH 0025	DIRECT DIESEL OIL HEATER 40kw	35 L	40	230V/50Hz	34.400	1750m³/h	150W	3.37
CH 0026	**DIRECT DIESEL OIL HEATER 50kw**	**35 L**	**50**	**230V/50Hz**	**43.000**	**1750m³/h**	**200W**	**4.22**
CH 0016	**DIRECT DIESEL OIL HEATER 60kw**	**70 L**	**60**	**230V/50Hz**	**51.600**	**1900m³/h**	**300W**	**5.06**
CH 0017	DIRECT DIESEL OIL HEATER 60kw HANGING	-	-	230V/50Hz		-	-	-
CH 0018	DIRECT DIESEL OIL HEATER 80kw	120 L	80	230V/50Hz	68.800	3500m³/h	150W	6.75
CH 0019	DIRECT DIESEL OIL HEATER 80kw HANGING	-	-	230V/50Hz		-	-	-
CH 0020	DIRECT DIESEL OIL HEATER 105kw	120 L	105	230V/50Hz	90.300	3500m³/h	150W	8.80
CH 0021	DIRECT DIESEL OIL HEATER 105kw HANGING	-	-	230V/50Hz		-	-	

230V 2 WARRANTY

GAS HEATERS

GAS HEATER

Metal structure painted with epoxy powders
Piezoelectric ignition (M)
Safety device using thermocouple and thermostat (M)
Electronic check device (E)
Flame safety check
Motor with thermal protection
Power delivery control
Suitable for open or semi-open environments

Accessories available on clas.com

REF	DESIGNATION	kW	Heating capacity (Kcal/h)	Air flow rate	Power consumption	Fuel consumption (kg/h)
CH 0014	GAS HEATER 97.5kw	52,8-97,5	45.410 82.850	3250m³/h	150W	3.77 7.15
CH 0015	ELECTRONIC GAS HEATER 97.5kw	52,8-97,5	45.410 82.850	3250m³/h	150W	3.77 7.15

ELECTRONIC GAS HEATER

Metal structure painted with epoxy powders
Burner in stainless steel
Flame safety is checked using an electronic device
Motor with thermal protection
Power delivery control
Suitable for open or semi-open environments

REF	DESIGNATION	kW	Heating capacity (Kcal/h)	Air flow rate	Power consumption	Fuel consumption (kg/h)
CH 0011	ELECTRONIC GAS HEATER 37.3kw	23,4-37,3	20.081 32.078	1000m³/h	80W	1.81 2.90
CH 0012	ELECTRONIC GAS HEATER 46.5kw	30,7-46,5	26.400 40.000	1600m³/h	103W	2.37
CH 0013	ELECTRONIC GAS HEATER 69kw	46-69	40.000 60.000	3270m³/h	188w	3.55 5.40

230V 2 WARRANTY

MANUAL DIRECT GAS HEATER

Suitable for open or semi-open environments
Metal structure painted with epoxy powders
Burner in stainless steel
Flame safety is checked using a thermostat thermocouple and solenoid valve
Piezoelectric ignition
Power delivery control
Motor with thermal protection
Gas type: propane or butane G 30-31

REF	DESIGNATION	kW	Tension	Heating capacity (Kcal/h)	Air flow rate	Power consumption	Fuel consumption (kg/h)
CH 0008	**MANUAL DIRECT GAS HEATER 37.3kw**	**23,4-37,3**	**230V/50Hz**	**20.081 32.078**	**1000m³/h**	**80W**	**1.81 2.90**
CH 0009	MANUAL GAS DIRECT HEATER 46.5kw	30,7-46,5	230V/50Hz	26.400 40.000	1600m³/h	103W	2.37
CH 0010	MANUAL DIRECT GAS HEATER 69kw	46-69	230V/50Hz	40.000 60.000	3270m³/h	188w	3.55 5.40

Accessories available on clas.com

DIRECT GAS HEATER

Suitable for open or semi open environments
Metal structure painted with epoxy powders
Burner in stainless steel
Control box in thermoplastic material with degree of insulation IP 44
Flame safety is checked using a thermostat thermocouple and solenoid valve
Piezoelectric ignition
Motor with thermal protection
Gas type: Propane or Butane G 30-31

REF	DESIGNATION	kW	Tension	Heating capacity (Kcal/h)	Air flow rate	Power consumption	Fuel consumption (kg/h)
CH 0005	DIRECT GAS HEATER 12kw	12	230V/50Hz	10.320	350m³/h	29W	0.94
CH 0006	**DIRECT GAS HEATER 15kw**	**6-15**	**230V/50Hz**	**5.160 12.900**	**350m³/h**	**29W**	**0.44 1.09**
CH 0007	DIRECT GAS HEATER 30kw	16-30	230V/50Hz	13.760 25.800	650m³/h	80W	1.12 2.10

230V 2 WARRANTY